HP 9145A
CE Service Handbook

Manual part number: 09145-90039

Printed: JULY 1988
Printed in U.K.

Edition 1
E0788

HEWLETT PACKARD

Hewlett-Packard Ltd.
Filton Road, Stoke Gifford, Bristol, BS12 6QZ, U.K.

Notice

The information contained in this document is subject to change without notice.

HEWLETT-PACKARD MAKES NO WARRANTY OF ANY KIND WITH REGARD TO THIS MATERIAL, INCLUDING, BUT NOT LIMITED TO, THE IMPLIED WARRANTIES OF MERCHANTABILITY AND FITNESS FOR A PARTICULAR PURPOSE. HEWLETT-PACKARD shall not be liable for errors contained herein or for incidental or consequential damages in connection with the furnishing, performance or use of this material.

This document contains proprietary information, which is protected by copyright. All rights are reserved. No part of this document may be photocopied, reproduced or translated to another language without the prior written consent of HEWLETT-PACKARD Company.

© Copyright 1988 by HEWLETT-PACKARD LIMITED

Printing History

New editions are complete revisions of the manual. Update packages, which are issued between editions, contain additional and replacement pages to be merged into the manual by the field personnel. The dates on the title page change only when a new edition or a new update is published. No information is incorporated into a reprinting unless it appears as a prior update; the edition does not change when an update is incorporated.

Edition 1 ..... JULY 1988

Preface

Included as an Appendix to this manual is a Comparison Table which serves as a training update. CEs who are already familiar with the HP 9144A should refer to this for a brief summary of the main differences between the HP 9144A and the HP 9145A.

Contents

Chapter 1 Page
Product Information 1-1

General Description 1-1
User Interface 1-2
Front Panel 1-3
Self-Test Information on the Front Panel 1-4
Rear Panel 1-4
Accessories 1-5
Power Cords 1-5
Accessories Supplied 1-6
Accessories Available 1-6
Rack Mounting 1-6
Mini-Rack Mounting 1-6
Safety Certification 1-7
Performance Specification 1-8
Data Capacity (formatted) 1-8
Data Transfer Rate 1-8
Average Access Time 1-8
Hard Error Rate 1-9
Physical Specification 1-10
Crated Dimensions and Weight 1-10
Uncrated Dimensions and Weight 1-10
Environmental Specifications 1-11
Temperature 1-11
Relative Humidity 1-11
Altitude 1-11
Vibration 1-11
Mechanical Shock 1-11
Susceptibility to Electrostatic Discharge 1-11
Magnetic Emissions 1-11
Heat Generated by the HP 9145A 1-11
Noise 1-12
Electrical Specifications 1-13
Input Voltage/Frequency 1-13
Power Consumption (in watts) 1-13
Power Line Susceptibility to Line Transients 1-13
Serial Number Information 1-14
Support Strategy 1-14
Host Support 1-15
Diagnostics 1-15

Chapter 2 Page
Site Preparation & Installation 2-1

Customer's Responsibility 2-1
Interconnections 2-2

Contents (continued)

Line Voltage and Fusing 2-3
HP-IB Address Switch 2-4

Chapter 3 **Page**
Operation 3-1

Cartridge Compatibility 3-1
The Load Sequence and Tensioning Cycle 3-1
Initializing 3-1
Storing and Restoring Data 3-2
Removing the Cartridge 3-3
Write-protecting a Cartridge 3-4
  Cartridge Tape Layout 3-5
    Formatting 3-5
    Certifying 3-6
Theory of Operations 3-7
  System Overview 3-7
  Circuit Functions 3-8
  Typical Data Transaction 3-9

Chapter 4 **Page**
Preventative Maintenance 4-1

Cleaning the Tape Head 4-1
Cartridge Care 4-2
  Temperature 4-2

Chapter 5 **Page**
Self-Tests & Troubleshooting 5-1

Introduction 5-1
  Remote Diagnostics 5-1
  Fault Categories 5-1
Repair Strategy 5-2
Initial Investigation 5-2
Product Self Test Procedures 5-3
  Displaying Error Codes 5-4

Chapter 6 **Page**
Adjustments 6-1

Chapter 7 Page
Parts Replacement 7-1

Required Tools/Equipment 7-1
Repair Environment 7-1
Disassembly and Reassembly 7-2
Preparation for Service 7-3
Top Shroud 7-4
Controller PCA 7-5
EPROMs 7-6
Front Panel Assembly 7-7
Power Supply Unit 7-8
Voltages and Currents 7-9
Power Valid Signal (PVAL) 7-9
Fan 7-10
Tape Transport Assembly 7-11
Microswitches & Cable 7-12
Illustrated Parts Breakout 7-13
Exchange Assemblies 7-14
Coded List of Manufacturers 7-14
Field Replaceable Parts List 7-14
Abbreviations List 7-14

Chapter 8 Page
Product History & Service Notes 8-1

Chapter 9 Page
Reference Material 9-1

Channel Interface 9-1
CS/80 Instruction Set 9-1
Transaction Structure 9-1
Real-Time Commands 9-1
Complementary Commands 9-2
General Purpose Commands 9-2
Diagnostic Commands 9-2
Transparent Commands 9-3
Hewlett-Packard Interface Bus 9-27
HP-IB Communications 9-29
Channel Management 9-29
Parallel Poll 9-29
Universal Device Clear 9-30
Message Structure 9-30
Run-Time Drive Errors 9-31

Contents (continued)

Appendix A
Comparison Between HP 9144A & HP 9145A — Page A-1

Figures and Tables

Figure or Table	Page
The Front Panel	1-2
The Rear Panel	1-3
Available Power Cords	1-5
The Serial Number Label	1-14
Interconnections to Host and to Power	2-2
HP-IB Address Setting	2-4
Blocks and Headers	3-5
Tape Head	3-6
Data Layout on Tape	3-7
Order of Disassembly	7-2
Transaction Structure	9-4
Hewlett-Packard Interface Bus Signal Lines	9-27

Product Information 1

This chapter contains general information about the HP 9145A 1/4-inch Cartridge Tape Drive. This consists of information about the user interface, accessories for the tape drive, specifications and a table explaining which computers are compatible with the HP 9145A.

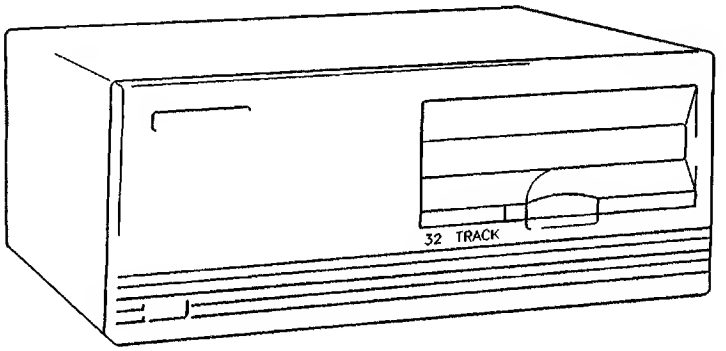

Figure 1-1. The HP 9145A Tape Drive

1.1 General Description

The HP 9145A is a 1/4-inch cartridge tape drive which provides system backup of up to 133 Mbytes per cartridge.

The HP 9145A is developed from the HP 9144A. The HP 9145A records data on 32 tracks on a 1/4-inch cartridge tape, whereas the HP 9144A uses 16 tracks. To provide this enhancement there have been improvements to the tape drive itself, and a new type of high performance tape cartridge has been developed. The different types of tape are explained in section **3.1.**

The tape drive is designed for connection to the Hewlett-Packard Interface Bus (HP-IB),* and uses the CS/80 Instruction Set.

The HP 9145A uses a read-while-write capability for data verification, as well as error correction. A media monitor is included for data protection which gives a Front Panel warning when a tape cartridge is nearing the end of its useful life. The data can then be copied onto a new tape and the old cartridge discarded.

*L Not just IEEE-488, but the hardware, documentation and support that delivers the shortest path to a computer system.

1.2 User Interface

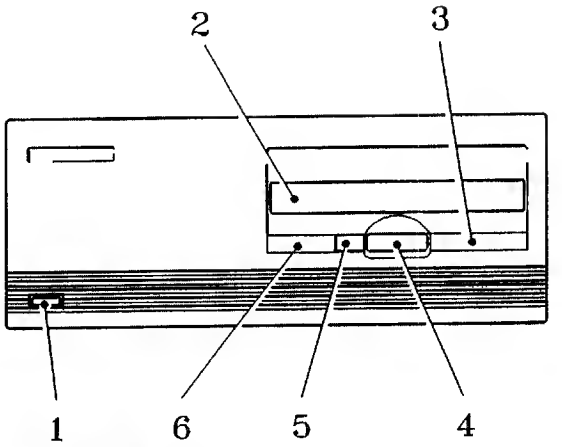

1.....AC LINE Switch
2.....Tape Transport
3.....Busy Protect Fault Lights
4.....EJECT Button
5.....Unload Button
6.....Clean and Loaded Lights

Figure 1-2. The Front Panel

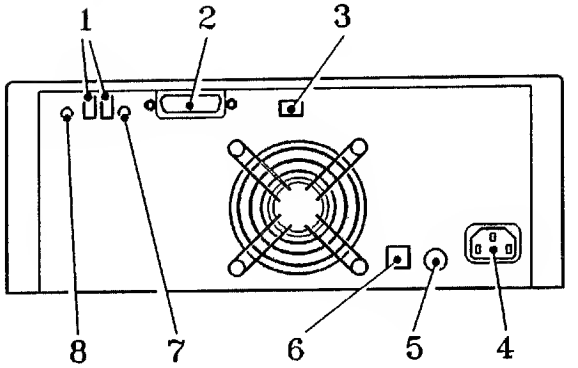

1.....Self-test LED displays
2.....HP-IB Connector
3.....HP-IB Address Switches
4.....Power Cable Socket
5.....Fuse
6.....Voltage Select Switch
7.....Initiate Self-test Button
8.....Display Self-test Results Button

Figure 1-3. The Rear Panel

1.2.1 Front Panel

Busy Light

The **Busy** light is lit when a tape is being loaded or unloaded and when the tape drive is processing commands from the host computer.

Protect Light

The **Protect** light is lit **continuously** when the cartridge in the tape drive is write-protected. If the tape is not a 32-Track cartridge the **Protect** light will light at the end of the load sequence. In either case, the drive can read data from the tape, but cannot write data to the tape.

The **Protect** light **flashes** after loading a tape which is nearing the end of its useful life (i.e. after 100 tape loads) then continues flashing until the tape is unloaded. The user should copy the data on the tape onto a new tape and discard the old one. Note that this **media monitor** warning does not prevent the drive writing data to the tape.

The **media monitor** also flashes if the HP 9145A finds that the noise level on the tape is above a threshold value.

A **write-protect** message always takes priority over a **media monitor** message. If the cartridge is write-protected, the **Protect** light will be lit continuously and you will not receive a media monitor warning when the cartridge has exceeded its useful life.

Fault Light

When the **Fault** light is lit, there is a fault either with the tape cartridge or the drive.

The **Fault** light indicates various types of failure by either lighting continuously or flashing in a number of ways; these are explained in **section 5.4**.

If the fault is in the tape cartridge, the **Fault** light will go out when you insert a different cartridge.

If the drive itself is faulty, the **Fault** light will light again when you change the cartridge. In this case, turn the drive off and on again. If the **Fault** light again lights, refer to **chapter 5** of this handbook.

Loaded Light

The **Loaded** light indicates whether a tape cartridge is loading, loaded or unloading. The sequence is as follows:

1. You insert a cartridge. During the load sequence, the **Loaded** light flashes. When the load sequence is finished, the **Loaded** light is lit continuously.

2. When you press the **Unload** button, the **Loaded** light is lit continuously for a period of about two seconds, then starts flashing. It continues to flash until the unload sequence is finished, and is then extinguished. If the host computer will not allow the tape drive to unload the cartridge, the **Loaded** light will remain lit continuously.

Clean Light

When the **Clean** light is lit, the tape head should be cleaned.

The HP 9145A counts the number of times a cartridge has been loaded since the last cleaning operation, and lights the **Clean** light after 20 tape loads. Using the cleaning cartridge resets the count to zero.

The **Clean** light does not indicate every occasion when cleaning is desirable. Please see the additional times when the tape head should be cleaned which are listed in **section 4.1.** The light is only lit when no cartridge is present, and will continue to be lit until the head is cleaned.

1.2.1.1 Self-Test Information on the Front Panel

The lights on the front panel can also be used to display self-test information. The tape drive presents this information by flashing the **Fault** lamp in various ways. This is explained more fully in **chapter 5.**

1.2.2 Rear Panel

The rear panel switches include the Display Results (DR) push-button, Initiate Self-Test push-button, HP-IB Device Address toggle switches and the Voltage Select slide-switch. These are shown in **figure 1-3.** The Display Results and Initiate Self-Test switches are both miniature push-buttons operated by pressing them with a fine-tipped implement. These push-buttons are used in fault-finding; their operation and purpose is explained in **chapter 5.**

1.3 Accessories

1.3.1 Power Cords

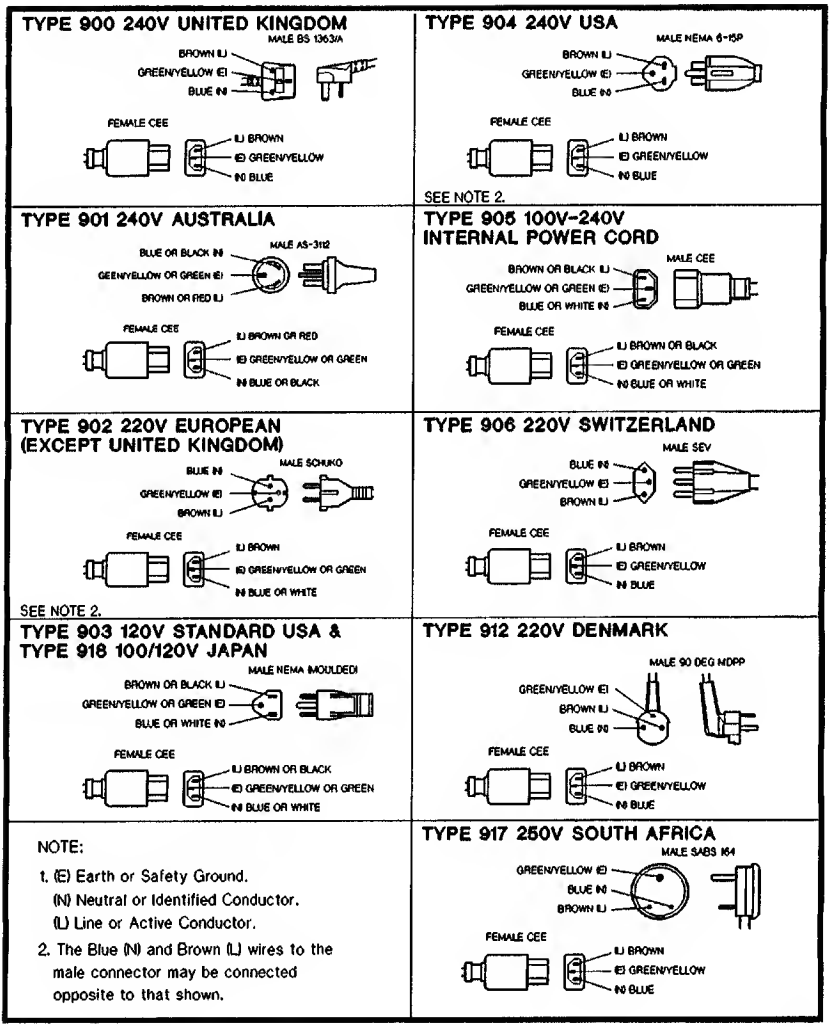

Figure 1-4. Available Power Cords

1.3.2 Accessories Supplied

When the Tape Drive is received, the shipping container should contain the following items:

Tape Drive: HP 9145A
Power cord: As appropriate (see **section 1.3.1**)
User's Manual: 09145-90000
Material Safety Data Sheet: 5957-6473
2 Spare Fuses: 2110-0003
Cleaning Cartridge Kit: HP 92193E

1.3.3 Accessories Available

The following accessories may be purchased separately to supplement those which are supplied.

HP-IB Interface Cable
0.5 meter: HP 10833D
1.0 meter: HP 10833A
2.0 meter: HP 10833B
Package of five 33 Mbyte, Type S (150 foot) tape cartridges: HP 92245S
Package of five 133 Mbyte, Type L (600 foot) tape cartridges: HP 92245L
Replenishment Kit for Cleaning Cartridge: HP 92193P
Design Plus mobile mini-rack system cabinet: HP 92211R
Rail Kit for HP 92211R. Contains 4 sets of rails and module locks: HP 92211S
Filler Panel Kit for HP 92211R. Contains twenty 26mm high snap-in panels to fill the space not occupied by equipment: HP 92211T
19-Inch Rack Mount Kit: HP 19500B

1.3.4 Rack Mounting

The HP 9145A can be mounted in a standard 19-inch rack. To do this you need the 19-inch Rack Mount Kit (part number HP 19500B).

Instructions are supplied with the kit.

1.3.5 Mini-Rack Mounting

The HP 9145A is a desktop unit which can also be mounted in a mobile mini-rack system cabinet (HP 92211R).

To fit the HP 9145A into the HP 92211R cabinet you will require a mounting rail kit (HP 92211S) and a filler panel kit (HP 92211T). See **section 1.3.3**.

1.4 Safety Certification

The HP 9145A complies with the following requirements:

- CSA Certified to CSA C22.2 No.220
- UL listed to UL 114 and UL 478 (5th edition)

Units shipped will meet the requirements of the country of destination.

- Meets all applicable safety standards of IEC 380 and IEC 435

1.5 Performance Specification

The Tape Drive has the following performance specifications.

1.5.1 Data Capacity (formatted)

133 Mbytes per "L" cartridge (600 foot)
33 Mbytes per "S" cartridge (150 foot)

NOTE

Not all of the storage capacity can be used for user data; some blocks on the tape are reserved as spares to be used if a faulty block is found elsewhere on the tape.

1.5.2 Data Transfer Rate

Maximum sustained 4 Mbytes per minute (SYSTEM DEPENDENT)

Maximum sustained transfer rate does not necessarily reflect system throughput which varies depending upon application, file structure and host/tape driver implementation.

Tape Read/Write Speed 120 inches per second (32-track cartridges)
120 or 90 inches per second (16-track cartridges)*

Tape Search/Rewind Speed 120 inches per second

1.5.3 Average Access Time

Load 1 minute 25 seconds (150 foot cartridge)
2 minutes 10 seconds (600 foot cartridge)

Unload 35 seconds (150 foot cartridge)
1 minute 25 seconds (600 foot cartridge)

Load times for 16-track tapes will take considerably longer, because the manufacturer's block is in a different place to that on a 32-track tape.

Unload times may also take longer (up to double the times indicated) depending on the position of the tape when the unload sequence is started.

---

*The HP 9145A normally reads 16-track tapes at 120 inches per second. If the tape drive encounters an uncorrectable error, it makes four more attempts to read the data at 120 inches per second. If it still fails to read the data, the drive will slow to 90 inches per second and make more attempts to read the data at that speed.

1.5.4 Hard Error Rate

1 in 10^{11} bits transferred

When errors are detected, the HP 9145A refers to the error correction frames in the relevant block to try to recover the data. If this fails, the drive then makes further attempts at data recovery using off-track stepping, gain stepping and speed changes. Errors that are unrecoverable by any of these methods are termed hard errors.

1.6 Physical Specification

1.6.1 Crated Dimensions and Weight

Height	286mm	11.3in
Width	445mm	17.5in
Depth	483mm	19in
Weight	10kg	22lb

1.6.2 Uncrated Dimensions and Weight

Height	132mm	5.2in
Width	325mm	12.8in
Depth	290mm	11.4in
Weight	8.0kg	17.6lb

1.7 Environmental Specifications

1.7.1 Temperature

Operating Temperature (media limited)	+5°C to +40°C 40°F to 104°F
Storage Temperature (without media)	-40°C to +70°C -40°F to 158°F

1.7.2 Relative Humidity

Operating humidity, non-condensing @ 26°C 79°F	20% to 80%
Non-Operating	Max 90% @ +65°C for 24h

1.7.3 Altitude

Maximum Operating Altitude	4,600m 15,000 ft
Maximum Non-Operating Altitude	15,000m 50,000 ft

1.7.4 Vibration

Operating limit	0.2g rms
Non-operating limit	2.1g rms

1.7.5 Mechanical Shock

Non-operating shock survival	100g for 3 ms duration
Transportation in shipping carton	30g for <= 26 ms

1.7.6 Susceptibility to Electrostatic Discharge

No data loss	0 to 15 kV
No physical damage	0 to 25 kV

1.7.7 Magnetic Emissions

Operating (at product surface)	5 Gauss
Non operating (at any surface)	2 mGauss @ 7 ft

1.7.8 Heat Generated by the HP 9145A

Typical	24 kcals/h 95 BTU/h
Maximum	48 kcals/h 190 BTU/h

1.7.9 Noise

Noise Level (media limited)	<6.0 Bels A

1.8 Electrical Specifications

1.8.1 Input Voltage/Frequency

Nominal	115V, 60 Hz or 230V, 50 Hz (switch selectable)
Voltage Range	90V min. to 132V max. 198V min. to 264V max.
Frequency Range	47 Hz to 63 Hz

1.8.2 Power Consumption (in watts)

Typical	28W rms

1.8.3 Power Line Susceptibility to Line Transients

Voltage Transients	±30% for 10 ms
Frequency Transients	±10% for 10 ms
Spike Transients	1000V for 50 μs

1.9 Serial Number Information

Figure 1-5. The Serial Number label

The serial number has a four digit prefix, a letter, and a five digit suffix (0000 E 00000). The first four digits are a date code which indicate when design changes were made. The letter designates the country in which the unit was manufactured ("E" indicates England). The five digit suffix is a sequential number which increments with each Tape Drive shipped. This label is located below the self-test displays on the rear panel.

In addition to the serial number label on the rear panel, there is a similar label on the Drive Mechanism. The serial numbers should be quoted when ordering parts.

1.10 Support Strategy

Level of Repair
The HP 9145A is repaired to the Field Replaceable Assembly (FRA) level. A combination of both non-exchange and exchange parts from the Product Support Division (PrSD) exchange program are used to achieve this.

Field Repair Center Strategy
If the HP 9145A is repaired at a Field Repair Center it should only be to the FRA level.

1.11 Host Support

The HP 9145A is supported on the host systems shown in table 1-1.

Table 1-1. Host Support Matrix.

Host Computer	Series	Operating System	Notes
HP 9000	300	HP-UX 6.2	
	800	HP-UX 3.0	
HP 3000	900	MPE-XL	Not Supported
	Others	MPE V V-MIT delta 3	

1.12 Diagnostics

The diagnostic firmware is used to determine the Most Suspect Field Replaceable Assembly (MSFRA) and display this information on the rear panel.

The rear panel self-test information is repeated (in an abbreviated form) by means of the front panel **Fault** light.

The customer can read these displays and provide the Customer Engineer with information about the failure prior to his visit. This enables the Customer Engineer to take sufficient parts on-site and minimize the repair time.

Chapter 5 gives further information on Self-Tests and Troubleshooting.

Site Preparation & Installation 2

2.1 Customer's Responsibility

It is the customer's responsibility to...

1. Unpack the equipment
2. Check it for damage
3. Choose a suitable position in which to place the tape drive
4. Alter the device address if necessary
5. Connect the tape drive to the host computer
6. Check that the voltage is set correctly for the local power supply
7. Connect the tape drive to the power supply

Chapter 2 of the User's Manual provides the information required to choose a suitable site for, and install, the HP 9145A.

For additional information on site environmental specifications, refer to **section 1.7** (*Environmental Specifications*) of this manual, and to the HP publication *CEO Site Prep Handbook (HP 5958-2370)*.

Some of the information in the User's Manual is repeated in this chapter to assist you where you suspect that incorrect installation may be causing a customer's problem.

2.2 Interconnections

There are only two interconnections for the Tape Drive, the HP-IB connection to the host computer and a connection to the power source. A typical setup is shown in figure 2.1, where the Tape Drive is connected to an HP 3000 Series 37 computer.

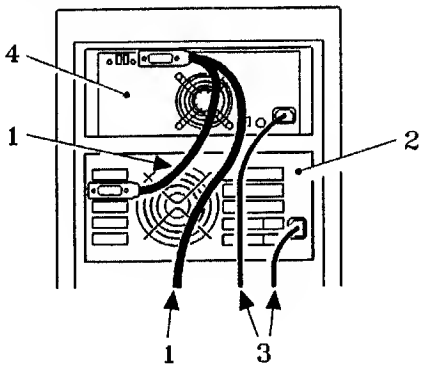

1.....HP-IB Cables
2.....HP 3000 Series 37 Computer (example)
3.....AC LINE Cords
4.....HP 9145A Tape Drive

Figure 2-1. Interconnections to Host and Power

When connecting the Tape Drive to a host computer, the following rules should be observed:

- All the AC line switches must be turned "OFF" when connecting and disconnecting devices to the system.
- No devices on the HP-IB are to be powered-on or off while there is activity on the bus.
- All devices must be powered-on during any bus transaction with a "high transfer rate" peripheral. When the host is talking to a lower transfer rate peripheral, such as a printer, at least two-thirds of the devices connected to the HP-IB must be powered-on.
- The maximum length for a single cable is two meters.
- The total length of cable permitted in one bus system must be less than or equal to two meters multiplied by the number of devices connected together. The connections should be in a linear configuration. Star configuration must **not** be used.
- The maximum number of devices that can be interconnected in one bus system is eight.
- Do not stack more than 3 of the connector blocks one on top of another.

- Do not use a screwdriver to tighten the lock screws on the connector blocks, they are designed for tightening by the fingers only. The screwdriver slots are provided to assist removal.

- For best results use only RFI shielded HP-IB cables. (These generally have metal bodied connectors).

The Tape Drive power cable supplied should be the correct type for the country of destination. Those available are shown in **figure 1-4**.

WARNING

If it is necessary to replace the power cable, the replacement must have a suitable earth conductor. Otherwise an internal failure of the drive could result in a safety hazard.

2.3 Line Voltage and Fusing

The voltage select switch on the rear panel must be set to the appropriate nominal line voltage for the area in which the Tape Drive is used. This switch is normally set to the appropriate voltage prior to shipping. The choice is either 115 VAC or 230 VAC. Use a 3.0A fuse (fast blow) for either voltage, even though you would expect a higher fuse rating for the lower voltage. The switch-mode supply should only be protected by a fuse of the given rating.

WARNING

Always disconnect the Tape Drive from any AC line before changing fuses.

The correct fuse to use is a 3.0A, 250 VAC, Fast Blow. This is obtainable as HP Part Number 2110-0003.

2.4 HP-IB Address Switch

The HP-IB address switches are set to give the unit the address 3, by which the host can identify it. This address setting should only be altered if the host is also connected to another device whose address is 3. The normal switch positions for this address are shown in **figure 2-2**. The miniature toggle switches are operated using a fine-tipped tool.

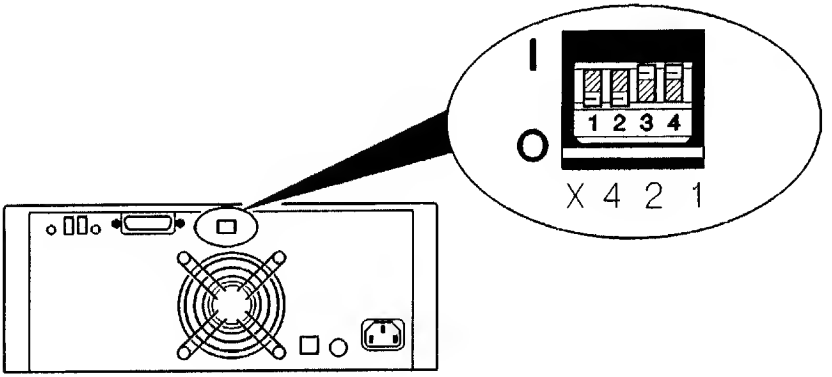

Figure 2-2. HP-IB Address Setting

The address can be set to any value between 0 and 7 according to **table 2.1**.

Switch Settings	HP-IB Address
X 4 2 1	
0 0 0	0
0 0 1	1
0 1 0	2
0 1 1	3
1 0 0	4
1 0 1	5
1 1 0	6
1 1 1	7

Table 2-1. HP-IB Addresses

NOTE

When setting the HP-IB address switches, disregard any markings on the switch body. Set the switches according to the markings on the rear panel. It does not matter which way the switch marked X is set.

To register the new address, you must either power-cycle the drive or initiate a self-test by pressing the self-test button (see **figure 1.3**).

Operation 3

3.1 Cartridge Compatibility

Tape cartridges for the HP 9145A are available in two capacities:

Type **L 133 Mbyte 600ft** part no. 92245L (box of 5)

Type **S 33 Mbyte 150ft** part no. 92245S (box of 5)

For recording data in the HP 9145A, the cartridges MUST be labelled **32-Track.**

The two types of cartridge listed above are formatted and certified at the factory.

NOTE

The HP 9145A tape drive writes data on 32-track tapes. The HP 9144A and HP 35401A tape drives use 16 tracks tapes. This means that the HP 9145A tape drive can read tapes written by the other drives, but that the other drives cannot read tapes written by the HP 9145A.

3.2 The Load Sequence and Tensioning Cycle

When a cartridge is inserted, the load sequence begins. During this, the drive examines and tests the tape and the read/write circuitry. The load sequence takes 1 minute 25 seconds for a 150 foot cartridge, or 2 minutes 10 seconds for a 600 foot cartridge.

In the unloaded condition, the tape is at EOT (End of Tape). During the load sequence, the tape is wound to BOT (Beginning of Tape), so that it is ready to start storing data. This winding process also performs a tensioning cycle, which ensures that tapes are at the same tension when being written or read.

3.3 Initializing

On some systems, the cartridge must be initialized before it is used for the first time. To do this, consult the instructions for the particular computer and operating system you are using.

CAUTION

Once data has been stored on a tape, initializing the tape a second time will destroy the data.

3.4 Storing and Restoring Data

In addition to utilities, there are two classes of commands which are used with the HP 9145A.

- Commands for storing data.
- Commands for restoring (or reading) data.

The particular commands which should be used depend on the type of computer to which the HP 9145A is connected, and the operating system in use.

Table 3.1 lists the commands to be used with the most common host systems.

Table 3-1. Commands for Storing and Restoring Files

Host Computer Operating System	Storing Data	Restoring Data
HP 3000 MPE V V-DELTA 3	FILE CT;DEV=*ctape*↵ STORE @.PUB.SYS;*CT;SHOW *See Note 1*	FILE CT;DEV=*ctape*↵ RESTORE *CT;@.@.@; KEEP;SHOW *See Note 1*
HP 9000 HP UNIX 6.2	cpio -o|tcio -o /dev/rct ↵	tcio -i /dev/rct |cpio -i ↵

NOTE 1

When you have entered this command, the console will display the message:

time/XX/YY/ZZ,write ring? (Y/N)

Where:

XX is the session number
YY is the Process I.D. Number
ZZ is the Logical Device Number for "CT" on CTAPE

When you see this message, respond with:
CONTROL A

At the = prompt, type:

REPLY YY,ZZ,Y↵

3.5 Removing the Cartridge

1) Press the Unload button. This starts a sequence which unlocks the cartridge to allow you to remove it. The unload sequence takes about one and a half minutes for a 133 Mbyte cartridge or about half a minute for a 33 Mbyte cartridge.

During the unload sequence the Loaded light flashes. Towards the end of the sequence the tape drive can produce a clattering sound which lasts for 2 or 3 seconds; this is quite normal, and indicates that the tape drive has unlocked the cartridge.

2) When the Loaded light goes out, press the EJECT button and remove the cartridge.

3) Store the cartridge in its plastic case after use.

3.6 Write-protecting a Cartridge

A cartridge can be write-protected, to protect the data from being altered or overwritten.

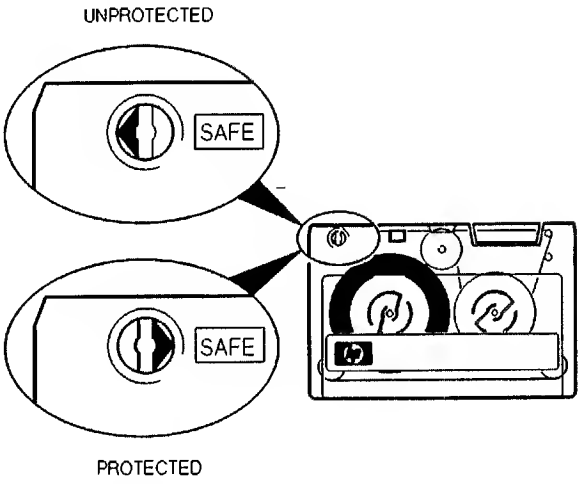

Figure 3-1. Write-protecting a Cartridge

To write-protect a cartridge, rotate the write-protect switch with a screwdriver or coin until the arrow points towards the word **SAFE.** The switch clicks into place when it is in the correct position.

If a cartridge is write-protected, the **Protect** light is lit and remains on steadily while the cartridge is in the drive.

CAUTION

When changing the position of the write-protect switch, make sure that the switch clicks into position with the arrow pointing directly towards or away from the word SAFE. If the switch is left in any other position it can damage the tape drive.

Write-protection will not prevent a cartridge being erased by bulk-erasure or degaussing.

NOTE

If a cartridge is write-protected, you will not receive a **media monitor** warning when the cartridge has exceeded its useful life. The warning is given by the **Protect** light flashing. **Protect** continuously lit, which tells you the cartridge is write-protected, takes precedence over the **media monitor** warning.

3.6.1 Cartridge Tape Layout

Before data can be written onto the cartridge, the cartridge must be formatted and then certified. The formatting process establishes blocks (spaces for 1024 characters) with headers throughout the tape. Certifying divides the tape width into 32 individual tracks. Each track is divided lengthwise into six 256-character frames per block.

Tapes are formatted at the factory. THE HP 9145A CANNOT FORMAT A BLANK OR BULK-ERASED CARTRIDGE. The Tape Drive can certify cartridges when the Initialize Media (see **table 9.3**) command is sent to it. It takes approximately 40 minutes to certify a 600 foot tape and 10 minutes to certify a 150 foot tape. For this reason factory-certified tapes should be used.

3.6.1.1 Formatting

Each tape cartridge is formatted before it is sent from the factory. Formatting uses one large head that spans the entire width of the tape. Key headers and data block sections are established along the entire tape length. Manufacturing information, EOT (End Of Tape), and BOT (Beginning Of Tape) fields, which are necessary for tape access, are also written.

CAUTION

No procedure for detecting bad tape sections is performed during formatting. The headers and data blocks are established for the life of the tape. Do not erase, bulk erase, degauss, or use any other methods of destroying the block sectors established by formatting.

Each header contains the timing and block information needed to allow the data blocks to be written and read. Each header is written twice, one the mirror image of the other, allowing it to be read from either tape direction.

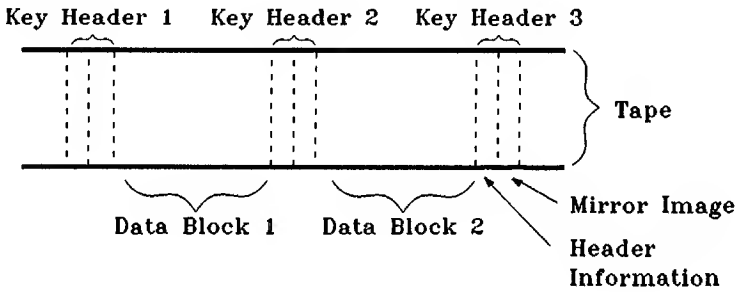

Figure 3-2. Blocks and Headers

Each data block contains the space for 1024 data characters plus 512 error correction characters.

3.6.1.2 Certifying

Certifying a formatted tape cartridge divides the tape into smaller sections. The width of the tape is divided into 32 tracks and each data block length is divided into six 256-character frames (four frames for user data, two frames for error correction).

The working area of the tape is thus divided into 32 tracks and a large number of blocks. To read and write data to the tape, a tape head with two read gaps and two write gaps is used. It is set up so that data can be read from the tape immediately after it has been written (Read-While-Write). This allows verification of the written data.

To avoid rewinding the tape after each track is read or searched, one set of read and write gaps is inverted. The first set of gaps is positioned over the tape for writing and reading in one direction and the other set is used in the opposite direction.

The gaps only span the width of a single track. By moving the head up and down over the width of the tape (using a head stepper motor) a pair of gaps can be positioned over any track. One pair of gaps can be positioned over sixteen tracks and the other pair cover the other sixteen.

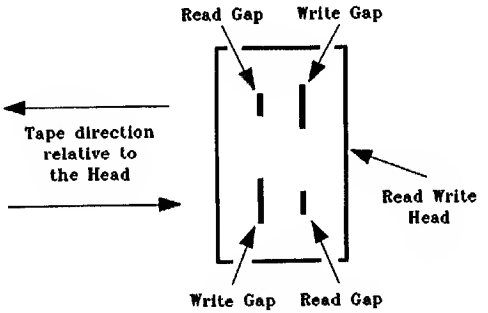

Figure 3-3. Tape head

One pair of gaps is used to write data on the tape in one direction. When the End Of Tape is reached, the tape direction is reversed and the other pair of gaps writes data on another track. In this way, data is put onto the tape in a serpentine fashion, as shown in **figure 3-4**.

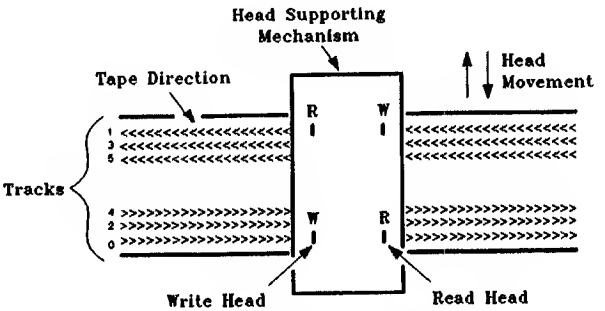

Figure 3-4. Data layout on tape

3.7 Theory of Operations

3.7.1 System Overview

The HP 9145A Tape Drive contains three major electronic assemblies:

- Controller PCA
- Read/Write & Servo PCA (RWS PCA)
- Power Supply PCA (PSU PCA)

The electronics of the HP 9145A can be considered as eight main functional areas:

1. The Host Dependent Controller (HDC), which consists of:

   - 68000 microprocessor

   - 16 Kbytes of non-volatile RAM

   - 128 Kbytes ROM containing:

     Channel firmware in charge of the HP-IB interface

     Buffer firmware in charge of managing data in the 64 Kbyte data FIFO buffer

     Device firmware in charge of reads/writes, tape positioning and retry mechanisms

2. The Device Dependent Controller (DDC), which consists of:

   - The Read State machine

   - The Write State machine

   - The DDC microcontroller which contains the **DDC firmware**

   - The Frame Selector

3. The Read/Write Circuitry (R/W)
4. The Servo Circuitry
5. The Read/Write Heads
6. The Drive Mechanism
7. The Front Panel Assembly
8. The Power Supply PCA

Items 1 and 2 (the HDC and the DDC) are combined on the Controller PCA. Items 3 and 4 are combined on the Read/Write & Servo PCA, which together with item 5 (the Read/Write Heads) and item 6 (the Drive Mechanism) forms the Tape Transport Assembly.

3.7.2 Circuit Functions

The functions of the electronic circuits are as follows:

The HDC circuitry:

- Communicates with the Host
- Separates HP-IB commands and data
- Sends data to and from the DDC and Host
- Controls the self-test and diagnostics

The DDC circuitry:

- Controls Read/Write and Servo functions
- Analyses MFM data sent from the Read/Write circuitry

  This analysis consists of:
  - finding keys
  - checking CRCs (Cyclic Redundancy Checks)
  - performing error correction

- Writes 1k blocks of data to the Read/Write circuitry

  This process consists of:
  - generating CRCs
  - generating frames 5 and 6 for error correction
  - generating headers for each frame

The Read/Write circuitry:

- Reads and writes from selected head gaps

  This process consists of:
  - selecting head gaps on instruction from the servo microprocessor
  - providing write current
  - amplifying and filtering read data from the head gaps
  - detecting PVAL, which inhibits write during power-up

The Servo circuitry:

- Controls capstan and head-stepper motors

  This process consists of:
  - maintaining the correct capstan speed and direction
  - positioning the head gaps on required tracks

In order to begin to understand how these areas interact, consider a typical data transaction.

3.7.3 Typical Data Transaction

1. The host computer sends a **read** command to the drive.

2. The HP-IB **channel** firmware receives and validates the read command.

3. The HP-IB **channel** firmware requests the **buffer** firmware for the data.

4. The **buffer** firmware may already have the data in the 64 Kbyte data FIFO buffer, in which case no tape motion is necessary. Otherwise, the **buffer** firmware sends multiple requests to the **device** firmware to read blocks of data.

5. For each **read block** request from the buffer, the **device** firmware will:

   a) Position the tape and heads to read the block.

   b) Send a request to the **DDC firmware** to read a block. The DDC firmware instructs the Read State machine and frame selector to read a block.

   c) If the DDC reads the block successfully, the **device** firmware sets up Direct Memory Access (DMA) so the DDC can transfer the block into the data FIFO buffer.

      If the DDC fails to read the block, the **device** firmware will reposition the tape and instruct the DDC to retry. Up to 11 retries are performed before the **device** firmware stops trying.

   d) If the block is read successfully, the **device** firmware reports a successful operation to the **buffer** firmware.

6. As soon as the **buffer** firmware has enough blocks to satisfy the **read** request, it sets up DMA to transfer the data via the HP-IB to the host.

7. Finally, the host interrogates the tape drive as to the status of the transfer, and receives information as to whether the transaction was successfully completed.

Preventative Maintenance 4

4.1 Cleaning the Tape Head

The tape head should be cleaned:

- Whenever the Clean light is lit.
- After using a new cartridge for the first time.
- Most importantly, if data errors are experienced.

The only supported cleaning technique is the use of the **cleaning cartridge** (part number **HP 92193E**). A cleaning cartridge is supplied with the HP 9145A.

Full instructions are included with the cleaning cartridge, but are repeated here in case they have been mislaid.

1) Ensure that the plastic slide tab on the cleaning cartridge is in the **OFF** position.

2) Thoroughly moisten the foam pad with the cleaning fluid provided.

CAUTION

HP *ONLY* supports the use of LIQUID FREON TF* as a tape path cleaning solvent. DO NOT USE ANY OTHER SOLVENT.

3) Insert the cartridge into the tape drive. Cleaning will take place for about 30-40 seconds, during which the Clean light flashes.

4) When cleaning has finished (Clean goes out), remove the cartridge by pressing the EJECT button.

5) Discard the foam pad after use.

Trademark of the Dupont Corporation

4.2 Cartridge Care

- Do not touch the tape, or attempt to clean the tape path or tape guides inside the cartridge.
- Do not leave cartridge tapes in excessively dry or humid conditions.
- Do not leave tapes in direct sunlight or in places where magnetic fields are present (e.g. under telephones, near transformers, motors etc.).
- Do not drop cartridges or handle them roughly.
- Do not stick extra labels onto cartridges; they could cause the cartridges to jam in the tape drive.
- Store cartridges in their plastic cases when not in use.
- Always keep the cartridges in a clean environment.
- To prevent overwriting data stored on the cartridge, use the write-protect switch on the cartridge. Refer to **Section 3.6.**

4.2.1 Temperature

Cartridges should only be used at temperatures between 5°C (40°F) and 40°C (104°F). You can, however, store them between -40°C (-40°F) and 45°C (113°F). If you expose cartridges to temperatures outside the operating limits, you should stabilize them before use. To do this, leave the cartridges in the operating temperature for a time equal to the time they were outside the limits, up to a maximum of 8 hours.

To avoid temperature problems, observe these guidelines:

- Do not place the tape drive in or near the flow of air from a heater or air conditioner. The cycling of the heater or air conditioner can cause data recovery problems.
- Do not leave the tape drive near a door which is often used, and which separates different temperature conditions. If the drive is placed near an outside door, for example, the blast of hot or cold air when the door is opened can affect data recovery.
- Avoid leaving cartridges in severe temperature conditions, for example in a car standing in the cold overnight.
- Avoid transferring data (reading from and writing to cartridges) when the temperature is changing by more than 10°C per hour.

Self-Tests & Troubleshooting 5

5.1 Introduction

When you are trying to identify why an HP 9145A is not working correctly, you will probably use some or all of the following techniques.

- Manual investigation techniques.
- The Tape Drive's Self-Test.
- Host Initiated Diagnostics.

See **section 5.3** for a discussion of which strategy to use.

5.1.1 Remote Diagnostics

When a customer has a modem, it is often possible to run host-initiated diagnostics from a terminal at the response centre.

5.1.2 Fault Categories

A customer's problem usually fits into one of the following categories

- Problems with the media
- A dirty tape head
- A failure associated with the connections to other equipment or to the mains power supply
- A problem with the host system or its software
- A hardware failure on the HP 9145A itself

Many of these problems can be overcome by the user with a customer engineer giving advice over the telephone.

5.2 Repair Strategy

The HP 9145A is repaired to the Field Replaceable Assembly (FRA) level. A combination of exchange and non-exchange parts from the PrSD exchange program is used to achieve this. The field replaceable exchange assemblies are:

09145-69515 Controller PCA
09145-69101 Tape Transport Assembly

To aid troubleshooting, the Tape Drive has self-test capabilities and diagnostic routines which may be initiated at power-on, by the operator or through the host. These self-tests are described in detail in **section 5.4**. They provide an indication of the failed FRAs, which can then be removed and replaced.

5.3 Initial Investigation

This section gives suggestions about the initial stage of troubleshooting an HP 9145A. Whenever possible, we will try to suggest ways that you can find as much as possible about a customer's problem by asking questions on the telephone. Often it will be possible to give a customer advice which helps him to fix the problem himself.

Key Questions

1. Is the fault intermittent or repeatable?

   If the fault is repeatable, you should ask the customer to run the product self-test which is explained in **section 5.4.**

   If the fault is intermittent, find out the circumstances in which the unit failed. If the circumstances do not suggest what the problem is, try to identify the problem using Host Initiated Diagnostics.

2. Does the problem disappear when the customer uses a different tape cartridge?

   If the answer to this question is **Yes**, suspect a problem with the media. You can find out more about the nature of the problem by using the Host Initiated Diagnostics.

   If a customer is having problems with media, check that the tape drive is being used in accordance with the environmental specifications detailed in **section 1.7.** Check with **section 4.2** that the cartridges are being treated correctly.

5.4 Product Self Test Procedures

The HP 9145A contains self-test routines which test all the major assemblies within the unit. The self-tests can be initiated in 3 ways:

- When the tape drive is powered on.
- When the initiate self-test push-button on the rear panel is pressed.
- When self-test is initiated from the host computer through the HP-IB. In this case, the drive only performs a subset of the self-test routines.

The power-on self-test checks that the major assemblies within the tape drive are operable and displays the HP-IB address on the LED displays on the rear panel.

If there is a problem, the front panel Fault light is lit and remains illuminated until another self-test is initiated or the unit is powered off.

After a power-on self-test, the Fault light provides an indication of the Most Suspect Field Replaceable Assembly (MSFRA) by lighting in various ways:

- **On Continuously,** indicates a faulty Controller PCA.
- **One long flash, short pause, one long flash...** indicates that the Drive Mechanism or Read/Write & Servo PCA is faulty.
- **Two short flashes, long pause, two short flashes...,** indicates that a fault has been detected, which could either be in the media or the FRAs.

The LED display on the rear panel shows the following sequence during the self-test routine.

	Off
8.8.	Indicates that the displays are working correctly
. .	Indicates that the self-test is proceeding
?	Indicates the revision letter of the HDC firmware
?	Indicates the revision letter of the DDC firmware
?	Indicates the revision letter of the SERVO firmware
P.? or F.?	Pass or Fail. ? is the HP-IB address of the Tape Drive

Each firmware revision letter is shown for one second; this allows you to check the firmware revisions without removing the cover. After a pass P? indication, the next step is to insert a tape cartridge, which initiates the load sequence.

Embedded within the load sequence is the read/write portion of the self-test. If the cartridge is write-protected, only the read portion is executed. The read and write

tests are performed on a section of the tape reserved for testing. If a fault is detected, the Fault light is turned on and the rear panel LED display shows the following.*

Fail on address ?

? is the device address.

NOTE

While the self-test results are being displayed, communication between the Tape Drive and the host computer is disabled. Once the display returns to either Pass or Fail, communication is re-established.

The next step is to use the Display Results button to show the failure.

5.4.1 Displaying Error Codes

After a self-test, pressing the Display Results (DR) button displays the following:

If the tape drive passed the self-test, pressing the DR button a second time returns the display to ??. However, if the self-test found a fault, pressing the DR button a second time displays an error code.

The error code indicates the Most Suspect Field Replaceable Assembly (MSFRA), and may be either of the following:

Controller PCA

Read/Write & Servo PCA & Tape Mechanism

If there is the possibility of the fault lying in a different MSFRA to the one which is indicated, pressing the DR button again will show the next most suspect FRA.

Once all the suspect FRAs have been displayed, pressing the DR button will display a number which indicates the diagnostic test which revealed a failure. The individual tests are explained in table 5-1.

---

*Sometimes the Fault light may flash, indicating that a fault has been detected, but the rear panel LED display will show a pass ?? condition. This means that a run-time drive error has occurred, but this is **not** a diagnostic failure.

Examples of run-time errors are:

- Failure to Load
- Failure to Unload

Information about these failures is available in the Run-Time Error (Fault) Log.

Table 5-1. Diagnostic/Self-Test Errors (TERRORS)

NUMBER		TEST DESCRIPTION	SUSPECT HARDWARE
DEC	HEX		
00	00	Complete test of Tape Drive	
01	01	HDC-DDC interface. Read Servo Status	Controller PCA
02	02	DDC Circuitry (executes tests 3,4 & 5)	
03	03	a) Microcomputer test	Controller PCA
04	04	b) Read/Write loopback	Controller PCA
05	05	c) HDC-DDC Read/Write loopback.	Controller PCA
06	06	HDC-DDC-Servo Interface	Read/Write & Servo PCA, Controller PCA
07	07	Read/Write & Servo PCA Servo Circuitry (executes tests 8 & 9)	
08	08	a) Read/Write & Servo PCA Microcomputer	Read/Write & Servo PCA
09	09	b) Capstan Motor and Drive Circuit	Read/Write & Servo PCA, Drive Mechanism (Capstan Motor)
10	0A	Unused	
11	0B	Unused	
12	0C	Unused	
13	0D	Test the read portion of the Read/Write & Servo PCA Circuitry (executes tests 14 & 15) Start by executing a Put Gaps on Tape command. This will assume the unit works and a Key Found signal can be generated. A failure of this command will cause the test to continue through the read tests, trying to diagnose what caused the failure. If the read tests all pass, the testing will halt and this test number will be the failing test.	Read/Write & Servo PCA, Controller PCA, Media

Table 5-1. Diagnostic/Self-Test Errors (TERRORS) continued

NUMBER		TEST DESCRIPTION	SUSPECT HARDWARE
DEC	HEX		
14	0E	a) With Read Gain set to minimum and Channel 0 positioned on the tape, enable Read with Read Head 0 and check for Over-threshold not being set.	Read/Write & Servo PCA, Controller PCA, Media
15	0F	b) With Read Gain set to minimum and channel 0 positioned on the tape enable Read with Write Head 0 and check for Over-threshold not being set.	Read/Write & Servo PCA, Controller PCA, Media
16	10	Unused	
17	11	Unused	
18	12	Unused	
19	13	Unused	
20	14	Unused	
21	15	Unused	
22	16	Tests the write portion of the Read/Write & Servo PCA Circuitry (executes tests 23 & 24).	Read/Write & Servo PCA, Controller PCA, Drive Mechanism, Media
23	17	a) After the edge of tape has been found and the tape wound to BOT, execute a Locate and Write to track 0, Key 4 with Channel 0. Read back the written data and verify it is the same data that was written. If not, return an error.	
24	18	b) Execute a Locate and Write to track 7, Key 5 with Channel 1. Read back the written data and verify it is the same data that was written. If not, return an error.	

Adjustments 6

There are no adjustable parts on the HP 9145A.

Parts Replacement 7

This section provides removal and replacement procedures for field replaceable assemblies (FRAs) and parts in the Tape Drive. Procedures are given in the normal order of disassembly. Each part or assembly which must be removed before access can be gained to another part or assembly is given first, followed by the next assembly which can be removed. The order of disassembly is shown in **figure 7-1**. References are also made to **figure 7-2**, HP 9145A Exploded View, to assist in identifying and locating parts.

7.1 Required Tools/Equipment

To repair the unit you need the Customer Engineer toolkit.

7.2 Repair Environment

The Tape Drive does not need to be repaired in clean room conditions and may be disassembled in the normal operating environment. The conditions there must comply, however, with both the operational and non-operational environmental limits of the Tape Drive. These are to be found in **Section 1.7.**

CAUTION

The field replaceable assemblies (FRAs) in the Tape Drive contain electrostatic-sensitive devices. Take appropriate precautions when removing the FRAs from the Tape Drive. Use of an anti-static pad and wrist strap is required. (These items are contained in the anti-static workstation, part number 9300-0749, normally found in the Customer Engineer toolkit.)

Immediately after removal, store the FRAs in anti-static, conductive plastic bags.

7.3 Disassembly and Reassembly

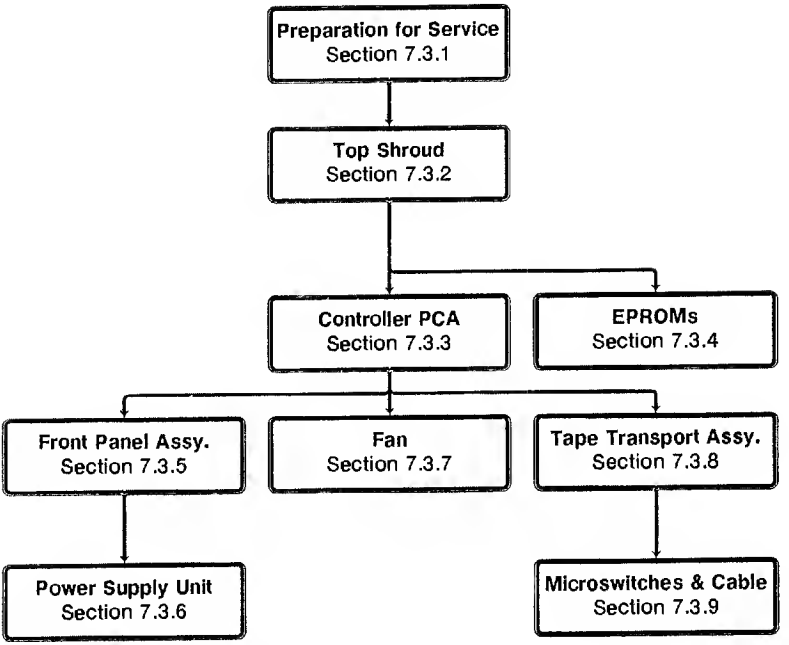

Figure 7-1. Order of Disassembly

7.3.1 Preparation for Service

Before starting any disassembly of the Tape Drive, the following steps should be taken to prepare it for service:

1. Set the AC LINE switch to the OFF (push-button out) position. Disconnect the power cord from the AC LINE socket on the rear of the Tape Drive.

2. Disconnect the HP-IB cable from the connector on the rear panel.

3. Place the Tape Drive on the anti-static mat and connect the wrist strap to the pad. When the top shroud is removed (**section 7.3.2**), ground the frame of the Tape Drive to the mat.

CAUTION

Ensure that the anti-static wrist strap is attached to your wrist before removing or replacing any components in the Tape Drive.

Removal and replacement instructions for FRAs and parts in the Tape Drive are provided in the following sections. Numbers in parentheses refer to index numbers in **table 7-2** and **figure 7-2**. Unless otherwise specified, replacement is the reverse of the removal procedure.

CAUTION

To remove cartridges from the drive, always use the Unload button or the unload command. If a cartridge is removed by any other method, the drive should be power cycled **first**, otherwise data may be lost.

7.3.2 Top Shroud

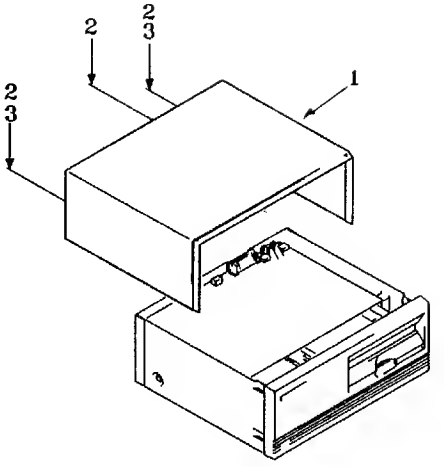

To remove the Top Shroud (1) proceed as follows:

1. Perform the preparation for service procedure outlined in **section 7.3.1.**
2. Ensure that the power cord is disconnected from the AC LINE socket on the rear panel.
3. Remove the three screws (2) and the two washers (3) on the rear panel, which secure the top shroud to the chassis assembly.
4. Carefully slide the top shroud towards the rear of the drive. When the top shroud is clear of the Front Panel Assembly (6), lift the shroud off the chassis.
5. Ground the chassis to the anti-static mat before removing any FRAs from the drive.

7.3.3 Controller PCA

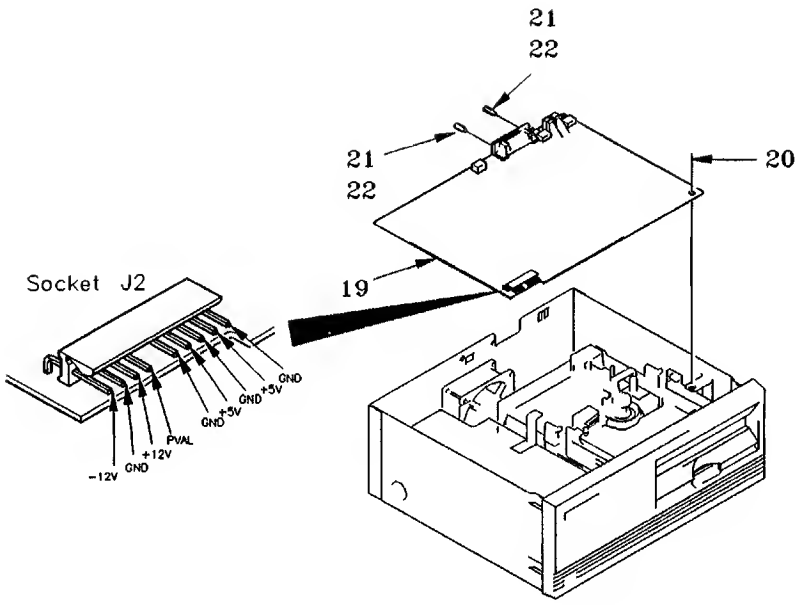

To remove the Controller PCA (19) from the Tape Drive, proceed as follows:

1. Remove the Top Shroud (refer to **section 7.3.2**).
2. Unplug the power cable (10) from socket J2 on the Controller PCA (19).
3. Remove the retaining screw (20) which attaches the front of the Controller PCA to the chassis.
4. Unscrew and remove the two 9/32 AF screwed spacers (21) which attach the HP-IB connector to the rear panel.
5. Unplug the cables connecting the Controller PCA to the Front Panel PCA and the Tape Transport Assembly.
6. The Controller PCA can now be lifted clear of the chassis and stored in an anti-static bag.

7.3.4 EPROMs

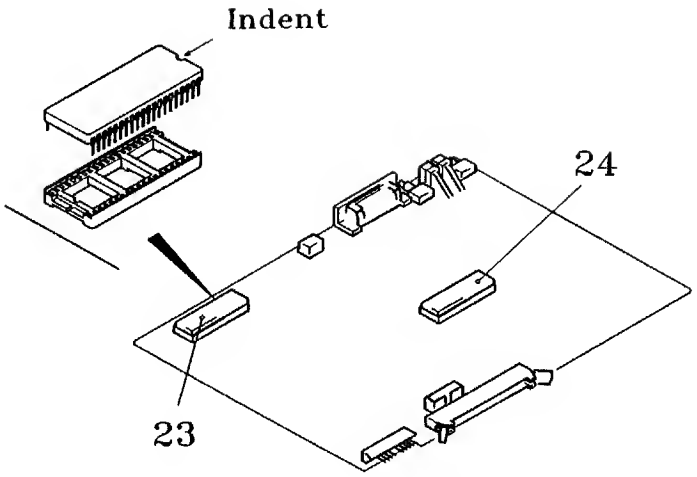

To remove the EPROMs from the Controller PCA, proceed as follows:

1. Remove the Top Shroud (refer to section 7.3.2).
2. Remove the CONTROLLER EPROM (23) from socket U112 on the Controller PCA (19).
3. Remove the DDC Processor (24) from the socket U33 on the Controller PCA.
4. Place the EPROMS on a piece of anti-static foam.

Replacement is the opposite of the removal procedure. Take care to ensure that the EPROMs are replaced in the correct sockets and are the correct way round, with their indents facing the same way as the indents in the other components. Check that all IC legs are installed in the socket.

7.3.5 Front Panel Assembly

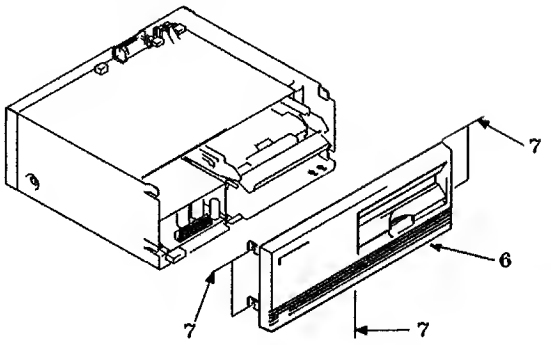

To remove the Front Panel Assembly (6) from the Tape Drive, proceed as follows:

1. Remove the Top Shroud (refer to **section 7.3.2**).
2. Remove the five M3 pozidrive screws (7) with their star washers, which attach the Front Panel Assembly to the chassis.
3. Pull off the Front Panel Assembly far enough to allow you to unplug the cable which connects the Front Panel PCA to the Controller PCA (19.)

7.3.6 Power Supply Unit

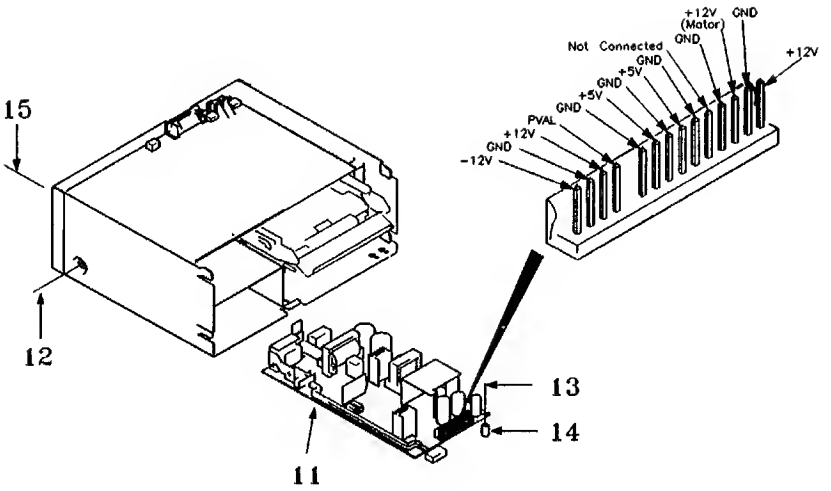

To remove the Power Supply Unit (11) from the Tape Drive, proceed as follows:

1. Remove the Front Panel Assembly (refer to **section 7.3.5**).
2. Remove the screw (12) attaching the earth bonding strap to the chassis.
3. Remove the screw (15) attaching the Power Supply Unit (11) to the rear of the chassis.
4. Unplug the cables which connect the Power Supply Unit to the Controller PCA (19), the Read/Write & Servo PCA and the fan (16).
5. Remove the screw (13) and spacer (14) attaching the front of the power supply to the base of the chassis.
6. The power supply assembly can now be removed from the front of the unit.

7.3.7 Voltages and Currents

The power supply for the HP 9145A should supply the following voltages and currents.

- Positive 5V (±150 mV). 2.1A mean, 2.7A max. Max ripple (peak to peak) 50 mV.
- Positive 12V (±360 mV). 0.11A mean. Max ripple (peak to peak) 100 mV.
- Negative 12V (±600 mV). 0.05A mean. Max ripple (peak to peak) 100 mV.
- Positive 12V (motor) (±1V). 250 mA min, 1.3A mean, 2.1A max. Max ripple (peak to peak) 100 mV.
- Power Valid Signal (PVAL) (see below)

7.3.8 Power Valid Signal (PVAL)

It is important that the HP 9145A does not attempt to write data to a tape when the power supply is unstable. For this reason, the HP 9145A requires a Power Valid Signal (PVAL) from the power supply.

PVAL monitors the positive 5V line from the power supply. At power-on, the power supply must wait until the 5V line reaches 4.75V. When this minimum has been sustained for at least 100 milliseconds, the power supply signals that it is giving a stable supply by applying a voltage to the PVAL line.

500 microseconds before the 5V line ceases to be within the specified tolerance band (for example at power-off), PVAL must go low to warn the HP 9145A that this is about to happen.

The voltage and current specifications for the two conditions of PVAL are as follows:

PVAL low	0.1V max. 0.47 mA.
PVAL high	4V 5.85 mA

7.3.9 Fan

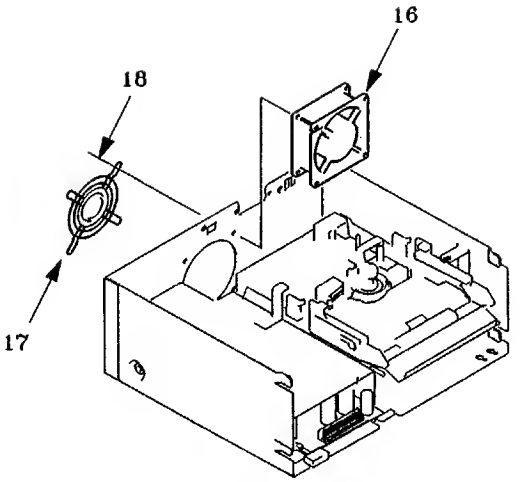

To remove the fan (16) from the unit, proceed as follows:

1. Remove the Controller PCA (see **section 7.3.3**).
2. Unclip the fan power cable from its clip on the side of the power supply housing.
3. Unplug the fan cable from socket J2 on the Power Supply Unit.
4. Remove the four self-tapping screws (18) attaching the fan to the rear panel.
5. Lift out the fan from the unit.

7.3.10 Tape Transport Assembly

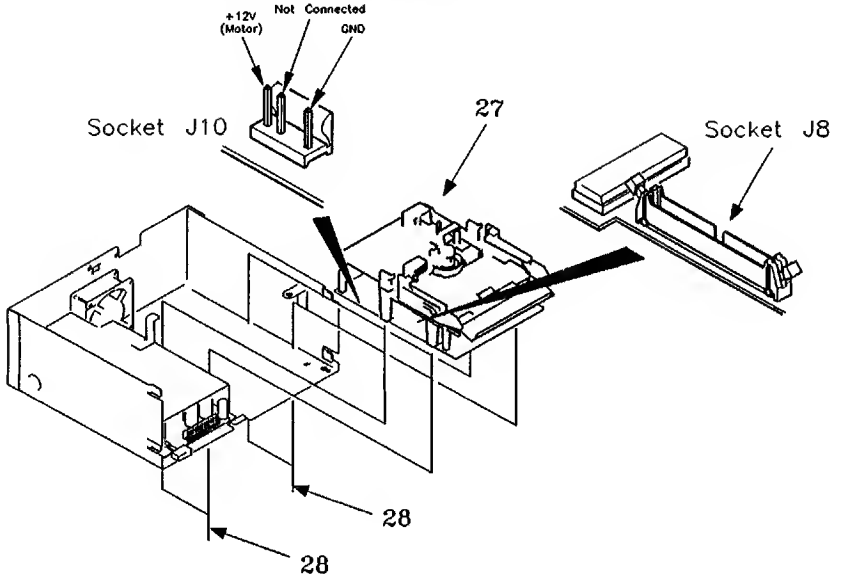

To remove the Tape Transport Assembly (27) from the Tape Drive, proceed as follows:

1. Remove the Controller PCA (see section **7.3.5**).
2. Unplug the power supply connection from plug J10 on the Read/Write & Servo (RWS) PCA.
3. Unplug the connection from plug J8 on the RWS PCA.
4. Turn the unit over and rest it on one side.
5. Make sure that the unit remains on the anti-static mat, as this also helps to prevent damaging the surface of the table on which you are working.
6. Supporting the drive mechanism with one hand, remove the four screws (28) attaching it to the base.
7. Put the unit back on its base and lift out the Tape Transport Assembly (27).

If you replace the whole assembly, do not remove the microswitches.

7.3.11 Microswitches & Cable

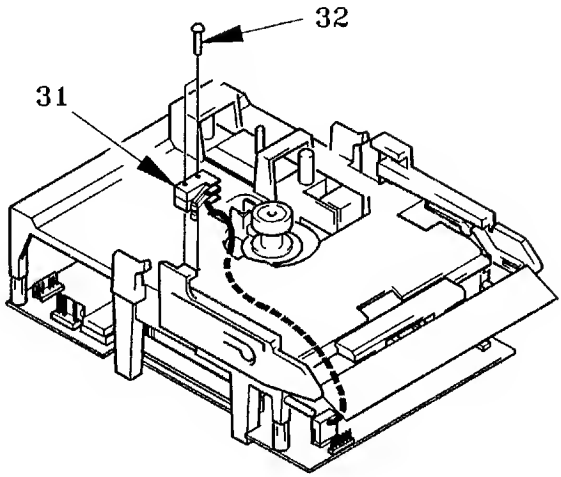

1. Remove the tape transport assembly. (see **section 7.3.10**).
2. Unplug the Microswitch Cable from socket J5 on the RWS PCA.
3. Remove the two screws which attach the microswitches to the drive mechanism chassis.
4. Take off the microswitches and withdraw the cable.

7.4 Illustrated Parts Breakout

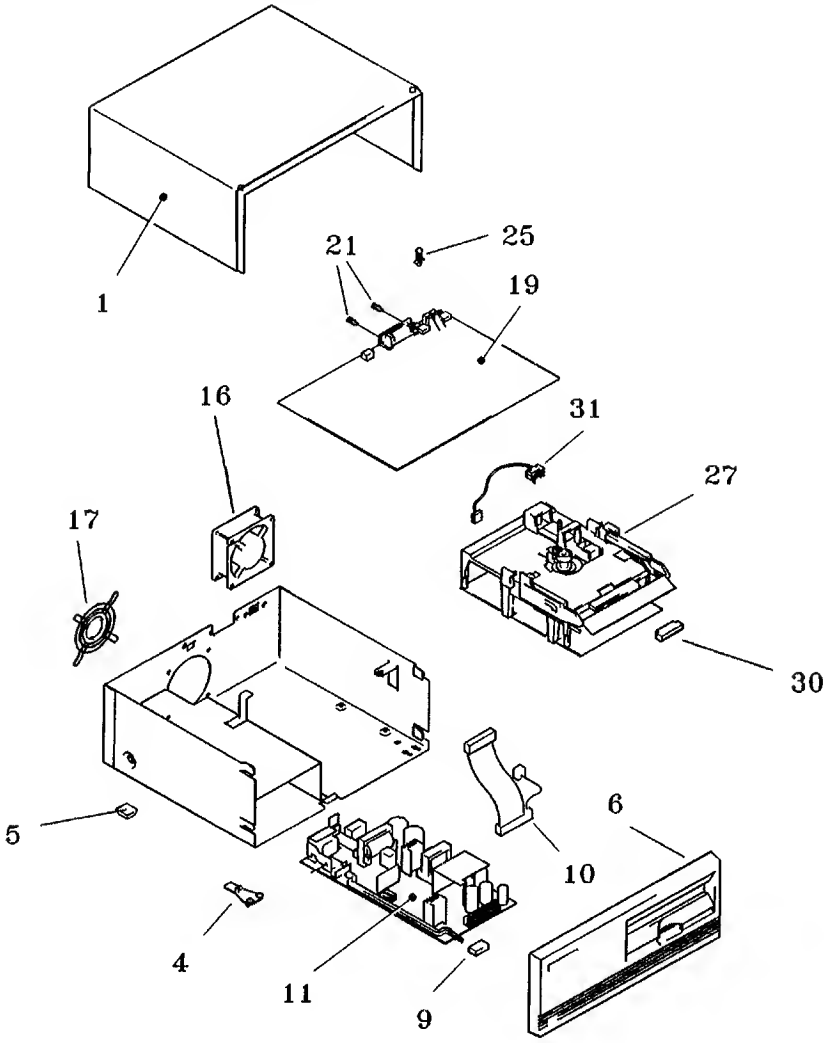

Figure 7-2. HP 9145A Exploded View

7.5 Exchange Assemblies

The following assemblies are included in the current exchange program:

09145-69101 TAPE TRANSPORT ASSY. (includes Read/Write & Servo PCA)
09145-69515 CONTROLLER PCA

7.6 Coded List of Manufacturers

A list of manufacturers is given in table 7-1.

Table 7-1. Coded List of Manufacturers

Code No.	Manufacturer	Address
28480	Hewlett-Packard Co.	Palo Alto, CA

These code numbers are taken from the Federal Supply Code for Manufacturers Cataloging Handbooks H4-1, and H4-2, and their supplements.

7.7 Field Replaceable Parts List

A list of Field Replaceable Parts is given in table 7-2.

7.8 Abbreviations List

A list of abbreviations is given in table 7-3.

Table 7-2. Replaceable Parts

FIG.& INDEX NO.	HP PART NO.	DESCRIPTION	MFR. CODE	MFR. PART NO.	UNITS PER ASSY.
REF	9145A	1/4-inch CARTRIDGE TAPE DRIVE	28480	9145A	REF
1.	09144-88865	*TOP SHROUD ASSEMBLY	28480	09144-88865	1
		(Attaching Parts)			
2.	0515-1079	*SCREW, machine, pnh, pozi, M3.0 by 0.5, 8mm long w/star washer.	00000	OBD	3
3.	3050-0891	*Plain Washer	00000	OBD	2
		- - - X - - -			
4.	09121-48303	*FRONT FOOT	28480	09121-48303	2
		- - - X - - -			
5.	0403-0427	*BUMPER FOOT	28480	0403-0427	2
		- - - X - - -			
6.	09145-88866	*FRONT PANEL ASSEMBLY	28480	09145-88866	1
		(Attaching Parts)			
7.	0515-1079	*SCREW, machine, pnh, pozi, M3.0 by 0.5, 8mm long w/star washer	00000	OBD	5
8.	09145-84305	**FRONT PANEL LABEL	28480	09145-84305	1
		- - - X - - -			
9.	5041-1203	*KEY CAP, WHITE (for AC line switch)	28480	5041-1203	1
		- - - X - - -			
10.	09144-61610	*RIBBON CABLE, POWER	28480	09144-61610	1
		- - - X - - -			
11.	09133-67120	*POWER SUPPLY UNIT A10	28480	09133-67120	1
		(Attaching Parts)			
12.	0515-0780	*SCREW (side), machine, pnh, pozi, M4.0 by 0.7, 10mm long w/star washer	00000	OBD	1
13.	0515-0105	*SCREW (front), machine, pnh, pozi, M3.0 by 15mm long	00000	OBD	1
14.	0380-1724	*SPACER (front) round, .281" long	28480	0380-1724	1
15.	0515-0780	*SCREW (back), machine, pnh, pozi, M4.0 by 0.7, 10mm long w/star washer	00000	OBD	1
		- - - X - - -			
16.	09144-68502	*FAN ASSEMBLY	28480	09144-68502	1
17.	07941-00026	*FAN GRILLE	28480	07941-00026	1
		(Attaching Parts)			
18.	0624-0525	*SCREW tapping, pnh, pozi, 10-14, 16mm long	00000	OBD	4
		- - - X - - -			
19.	09145-66515	*CONTROLLER PCA	28480	09145-66515	1
		(Attaching Parts)			
20.	0515-1079	*SCREW, machine, pnh, pozi, M3.0 by 0.5, 8mm long w/star washer.	00000	OBD	1
21.	0380-0643	*STAND-OFF, HEX, 6-32, 0.255in long.	00000	OBD	2
22.	2190-0017	*WASHER, split lock	00000	OBD	2
23.	09145-8900X	**CONTROLLER EPROM	28480	09145-8900X	1
24.	09145-8901X	**ODC PROCESSOR/ROM	28480	09145-8901X	1
25.	0380-1656	*STAND OFF SPACER (Plastic)	28480	0380-1656	1
26.	09144-61614	*DRIVE CABLE (Controller PCA to RWS PCA	28480	09144-61614	
		- - - X - - -			

Table 7-2. Replaceble Parts (continued)

FIG.& INDEX NO.	HP PART NO.	DESCRIPTION	MFR. CODE	MFR. PART NO.	UNITS PER ASSY.
27.	09145-60101	*TAPE TRANSPORT ASSY.(including RWS PCA)	28480	09145-60101	1
		(Attaching Parts)			
28.	0515-1079	*SCREW, machine, pnh, pozi, M3.0 by 0.5, 8mm long w/star washer.	00000	OBD	4
29.	09145-8902X	**SERVO PROCESSOR/ROM	28480	09145-8902X	1
30.	09144-47402	**EJECT KEY CAP	28480	09144-47402	1
31.	09144-61607	**MICROSWITCHES AND CABLE	28480	09144-61607	1
		(Attaching Parts)			
32.	0515-0334	**SCREW, machine, pnh, pozi, M2.0 by 0.4, 18mm long.	00000	OBD	2
		- - - X - - -			
33.	09145-10001	*ROM KIT (Includes items 23, 24 & 29)	28480	09145-10001	1

Table 7-3. Abbreviations

A	= ampere(s)
AC	= alternating current
AR	= as required
assy	= assembly
brkt	= bracket
c	= centi (10^{-2})
C	= Celsius, centigrade
conn	= connector
d	= deci (10^{-1})
DC	= direct current
deg	= degree(s)
dia	= diameter
ext	= external
F	= Fahrenheit, farad
fb	= fast blow
fh	= flat head
fig.	= figure
fw	= full wave
fxd	= fixed
G	= giga (10^{9})
hd	= head
hex	= hexagon, hexagonal
Hz	= Hertz
ID	= inside diameter
in.	= inch, inches
incl	= include(s)
intl	= internal
I/O	= input/output
k	= kilo (10^{3}), kilohm
kg	= kilogram
lb	= pound
LED	= light-emitting diode
lh	= left hand
M	= mega (10^{6}), megohm
m	= milli (10^{-3})
met oxd	= metal oxide
mfr	= manufacturer
misc	= miscellaneous
mm	= millimeter
mtg	= mounting
n	= nano (10^{-9})
no.	= number
NSR	= not separately replaceable
OBD	= order by description
OD	= outside diameter
p	= pico (10^{-12})
PCA	= printed-circuit assembly
pnh	= pan head
P/O	= part of
pozi	= Pozidrive
qty	= quantity
rdh	= round head
ref	= reference
rf	= radio frequency
rfi	= radio frequency interference
rh	= right hand
rpm	= revolutions per minute
slftpg	= self-tapping
sst	= stainless steel
stl	= steel
sw	= switch
T	= TORX(R) screw
Ta	= tantalum
thd	= thread
tol	= tolerance
U (u)	= micro (10^{-6})
V	= volt(s)
var	= variable
W	= watt(s)
w/	= with

TORX(R) is a registered trademark of the Camcar Division of Textron, Inc.

Product History & Service Notes 8

As the HP 9145A is a new product, there is no product history. This chapter is included to allow you to add service notes when they are released for the HP 9145A. When this manual is updated or revised, the information in the service notes up to the revision date will be included in this chapter.

Reference Material 9

This section provides useful reference material including miscellaneous technical data which has been referred to in earlier sections.

9.1 Channel Interface

The Tape Drive interface is through the Hewlett-Packard Interface Bus (HP-IB) hardware and the CS/80 Instruction Set, a set of commands formulated for mass storage devices. The following paragraphs discuss the types of CS/80 commands. Also provided is an overview of HP-IB. For full details of CS/80, refer to the *CS/80 Instruction Set Programming Manual*, part no. 5955-3442.

9.2 CS/80 Instruction Set

The CS/80 Instruction Set increases the efficiency and speed of channel operations between tape drives and their associated host computers. **Tables 9-1** to **9-5** provide a summary of all CS/80 instructions used with the Tape Drive.

The CS/80 Instruction Set allows a host computer to access special utilities within the Tape Drive. Utilities are routines stored in firmware which allow error-rate tests to be performed and the results of such tests to be examined or logged. Utilities are listed in **table 9-6**, Tape Drive Utilities.

9.3 Transaction Structure

A transaction is a logically complete operation between a system host computer and a peripheral device (the Tape Drive) over a given channel (HP-IB). Three phases may occur during each transaction: command, execute, and report. A transaction begins when a command is received by the Tape Drive, and ends when a reporting message indicating the status of the transaction is accepted by the host. **Figure 9-1** illustrates the transaction structure, and shows the relationship between the Tape Drive operating states and the channel activity relative to each phase.

A unit is a separately addressable entity within the Tape Drive. A volume is a separately addressable portion of the storage media within a given unit.

9.4 Real-Time Commands

Real-time commands are optimized for execution time. These commands are used most often in host/device transactions. One or more complementary commands may precede a real-time command in order to modify the operation of that command.

Real-time commands include:

- Locate and Read
- Cold Load Read

- Locate and Write
- Write File Mark

See table 9-1.

9.5 Complementary Commands

See table 9-2.

9.6 General Purpose Commands

This command group includes commands which allow the host to determine device type and operating characteristics or to ascertain storage media integrity. These commands are not considered "real-time" commands and therefore should not be issued by the host unless it is willing to relinquish control of the drive for a varying period of time.

General purpose commands are:

- Locate and Verify
- Release
- Release Denied
- Describe
- Initialize Media
- Load
- Unload
- Extended Describe

See table 9-3.

9.7 Diagnostic Commands

Diagnostic commands are intended to assist the host in isolating problems in the device to the replaceable assembly level. Some commands allow protected access to variables or data maintained by the device (such as error information), while others cause tests to be performed within the device, or on a specific area of the storage media. Diagnostic commands may be modified by complementary commands.

Diagnostic commands include:

- Initiate Diagnostic
- Initiate Utility

- Request Status

See table 9-4.

9.8 Transparent Commands

Transparent commands compensate for different types of channels and differences in operating environments. These commands are intercepted by the device firmware and modify the normal command-execution-reporting transaction sequence.

Transparent commands implemented by the HP 9145A include:

- Universal Device Clear
- Selected Device Clear
- Channel Independent Clear
- Cancel
- Loopback
- HP-IB Parity Checking
- Identify

See table 9-5.

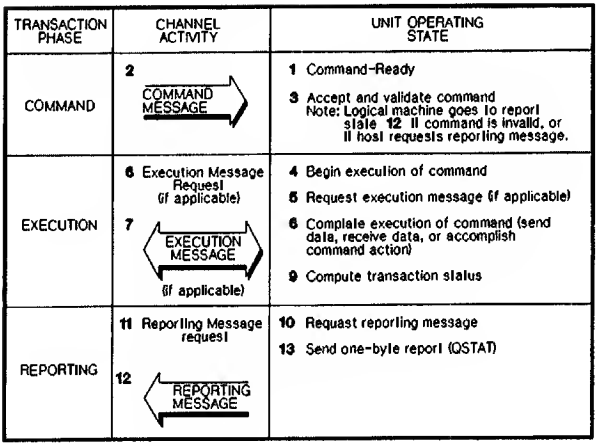

(1) Tape Drive idle in command-ready state.

(2) Host sends command message.

(3) Tape Drive accepts and verifies command. If command is valid, Tape Drive moves to execution state. If not, Tape Drive moves to reporting state.

(4) Drive begins execution of command.

(5,6) If command involves data transfer, Tape Drive requests an execution message. If not, drive completes execution (6).

(7) Execution phase is established if command involves a data transfer.

(8) Drive completes execution of command. If command involves data transfer, drive sends or receives data through channel module. If not, drive completes action called for in command message.

(9) Tape Drive computes completion status of transaction. Pass/Fail status is set into QSTAT, complete status set into request status.

(10,11) Tape Drive requests reporting message.

(12) Reporting phase is established.

(13) Tape Drive sends 1-byte reporting message (QSTAT) indicating Pass/Fail status of transaction. Host must send request command for complete status report (20 bytes).

Figure 9-1. Transaction Structure

Table 9-1. Device Real-Time Command Summary

LOCATE AND READ

FUNCTION: Locates the data indicated by the target address and transmits the data to the host.

OPCODE: 0_{10} 00000000_2 000_8 00_{16}

FORMAT: No variables or parameters

COLD LOAD READ

FUNCTION: Used by the host to bootstrap itself into a higher operating environment from a more primitive state.

OPCODE: 10_{10} 00001010_2 012_8 $0A_{16}$

FORMAT: No variables or parameters

LOCATE AND WRITE

FUNCTION: Transfers data from the host for storage beginning at the address specified by the target address.

OPCODE: 2_{10} 00000010_2 002_8 02_{16}

FORMAT: No variables or parameters

WRITE FILE MARK

FUNCTION: Causes a file mark to be written at the current tape position or any position selected through the use of the Set Address command.

OPCODE: 73_{10} 01001001_2 111_8 49_{16}

FORMAT: No variables or parameters

Table 9-2. Device Complementary Command Summary

SET UNIT

FUNCTION: Used to specify a specific unit within the device.

OPCODE: 32_{10} 00100000_2 040_8 20_{16} unit 0
47_{10} 00101111_2 057_8 $2F_{16}$ unit 15
The only valid parameters for the **Set Unit** command are 0 and 15. Any attempt to set the unit to another number will result in a module addressing error.

FORMAT: <0010YYYY>

YYYY = unit number (1111 = device controller)

SET ADDRESS

FUNCTION: Used to set the value of the target address and to define the addressing mode.

OPCODE: 16_{10} 00010000_2 020_8 10_{16}
17_{10} 00010001_2 021_8 11_{16}

FORMAT: <0001000T> < P1 > - - - - < P6 >

T = address mode (0 = single vector)
Single vector format: 6-byte binary number

SET BLOCK DISPLACEMENT

FUNCTION: Adjusts the target address by the number of blocks indicated by the parameter field. It is recommended that SET ADDRESS is used in preference to this command.

OPCODE: 18_{10} 00010010_2 022_8 12_{16}

FORMAT: <00010010> < P1 > - - - - < P6 >

Parameter format: 6-byte, signed, two's complement, binary number

NO OP

FUNCTION: Causes the device to disregard the message byte.

OPCODE: 52_{10} 00110100_2 064_8 34_{16}

FORMAT: No variables or parameters

Table 9-2. Device Complementary Command Summary (continued)

SET RETURN ADDRESSING MODE

FUNCTION: Specifies the address format returned in the parameter field of the status message. Single vector addressing is always used and so this command is ignored by the HP 9145A.

OPCODE: 72_{10} 01001000_2 110_8 48_{16}

FORMAT: <01001000> <00000TTT>

TTT = addressing mode
000 = single-vector

SET LENGTH

FUNCTION: Defines the number of bytes in a data transfer.

OPCODE: 24_{10} 00011000_2 030_8 18_{16}

FORMAT: <00011000> < P1 > - - - - < P4 >

Parameter format: 4-byte, unsigned, binary number

SET RELEASE

FUNCTION: Defines how a device will respond to an internal release request.

OPCODE: 59_{10} 00111011_2 073_8 $3B_{16}$

FORMAT: <00111011> <TZ000000>

T = 1 Suppress release timeout
Z = 1 Release automatically during idle time

SET STATUS MASK

FUNCTION: Provides selective masking of error conditions reported in the status message.

OPCODE: 62_{10} 00111110_2 076_8 $3E_{16}$

FORMAT: <00111110> < P1 > - - - - - - - - < P8 >

The bit positions in the parameter bytes (P1-P8) correspond to the bit positions in the status message. Refer to paragraph 2-45 in the CS/80 Programming Manual.

1 = masked error

Table 9-2. Device Complementary Command Summary (continued)

SET VOLUME

FUNCTION: Selects a specific volume on the currently selected unit.

OPCODE: 64_{10} 01000000_2 100_8 40_{16}

FORMAT: <01000YYY>

YYY = volume number (volume 0 only)

SET RETRY TIME

FUNCTION: Sets the number of retries available for read and seek retries.

OPCODE: 58_{10} 00111010_2 072_8 $3A_{16}$

FORMAT: <00111010> < P1 > < P2 >

P1-P2 = number of retries (16-bit binary number). This command will be ignored if received from host.

SET OPTIONS

FUNCTION: Used by the host to set device specific options.

OPCODE: 56_{10} 00111000_2 070_8 38_{16}

FORMAT: <00111000> <0000XVYZ>

X = 0: Disable immediate report/command queuing
X = 1: Enable immediate report/command queuing (default)

V = 0: Auto sparing disabled - ignored if from host
V = 1: Auto sparing enabled (default)

Y = 0: Auto spare invokes Jump sparing (default)
Y = 1: Auto spare invokes Skip sparing

Z = 0: Disable character count - ignored if from host
Z = 1: Enable character count capability (default)

The power-up and default value for the options byte is 00001101_2.

Table 9-3. Device General Purpose Command Summary

LOCATE AND VERIFY

FUNCTION: Instructs the device to perform an internal verification of a section of data to ensure that it can be read.

OPCODE: 4_{10} 00000100_2 004_8 04_{16}

FORMAT: No variables or parameters

RELEASE

FUNCTION: Releases the device.

OPCODE: 14_{10} 00001110_2 016_8 $0E_{16}$

FORMAT: No variables or parameters

RELEASE DENIED

FUNCTION: Prohibits the device from releasing itself.

OPCODE: 15_{10} 00001111_2 017_8 $0F_{16}$

FORMAT: No variables or parameters

Table 9-3. Device General Purpose Command Summary (continued)

DESCRIBE

FUNCTION: Directs the device to return information about the currently loaded cartridge. It gives a controller description, unit description and a volume description.

OPCODE: 53_{10} 00110101_2 065_8 35_{16}

FORMAT: All individual fields are 8-bit binary. Numbers are given in hexadecimal unless otherwise stated.

Controller Description Field (5 bytes)

C1, C2 = 80, 01 (Installed unit type: U0, U15)
C3, C4 = 03, E8 (Max transfer rate is 1Mbyte per second)
C5 = 00 (Integrated single unit controller)

Unit Description Field (19 bytes)

U1 = 02 (Tape Drive)
U2 - U4 = 09, 14, 50 (Model No is 9145A)
U5, U6 = 04, 00 (1024 bytes per block)
U7 = 40 (64 blocks can be buffered - can vary)
U8 = 00 (burst mode not recommended)
U9, U10 = 3A, 98 (15 000 microseconds block to block)
U11, U12 = 00, 42 (66 000 bytes per second ave. transfer rate)
U13, U14 = 00, 00
U15, U16 = BB, 80 (Access time 10s msecs - 480 secs)
U17 = 00 (maximum interleave factor)
U18 = 00 (no fixed volumes)
U19 = 01 (1 removable volume)

Volume Description Field (13 bytes)

V1 - V6 = all 00 (the tape drive does not support 3 vector addressing)
V7 - V12 = 00, 00, 00, nn, nn, nn Maximum block address (nn, nn, nn) is either:

01, FD, FF (130559 - 600 foot tape, with spares)

00, 7F, 7F (32639 - 150 foot tape with spares)

00, 00, 00 (no tape loaded in drive)

V13 = 00 (current interleave is 0)

Table 9-3. Device General Purpose Command Summary (continued)

INITIALIZE MEDIA

FUNCTION: Initializes all the data fields of the currently selected unit.

OPCODE: 55_{10} 00110111_2 067_8 37_{16}

FORMAT: <00110111> <00000CWZ>$_{P1}$ < P2 >

P1 = initiate options byte

Options for tape media:
CZ = 00 Certifies if no spares table) or optimizes current spares table
CZ = 01 Certifies
CZ = 10 Optimises current spares table
CZ = 11 Builds new spares table

P2 = Block interleave byte

LOAD

FUNCTION: This command (re-) loads the cartridge present in the drive without the need to eject and reinsert it.

OPCODE: 75_{10} 01001011_2 113_8 $4B_{16}$

FORMAT: <01001011> <00000000>

UNLOAD

FUNCTION: Causes the drive mechanism to perform an unload sequence.

OPCODE: 74_{10} 01001010_2 112_8 $4A_{16}$

FORMAT: No variables or parameters

Table 9-4. Device Diagnostic Command Summary

INITIATE DIAGNOSTIC

FUNCTION: Directs the device to perform one internally defined diagnostic routine.

OPCODE: 51_{10} 00110011_2 063_8 33_{16}

FORMAT: <00110011> < P1 > < P2 > < P3 >

P1-P2 = loop parameter
P3 = diagnostic section number

EXECUTE UTILITY

FUNCTION: Directs the device to perform one utility routine.

OPCODE: 48_{10} 00110000_2 060_8 30_{16}
49_{10} 00110001_2 061_8 31_{16}
50_{10} 00110010_2 062_8 32_{16}

FORMAT: <001100XX> < P1 > < n parameter bytes >

XX = execution message qualifier
00 = no execution message
01 = device will receive execution message
10 = device will send execution message
P1 = utility number (device specific)
There can be up to 8 bytes in the parameter field. The number and content of these bytes is determined by P1.

Information about the individual Tape Drive Utilities is found in Table 9-6.

REQUEST STATUS

FUNCTION: Instructs the device to return (in an execution message) the status report.

OPCODE: 13_{10} 00001101_2 015_8 $0D_{16}$

FORMAT: No variables or parameters

Table 9-5. Device Transparent Command Summary

UNIVERSAL DEVICE CLEAR

FUNCTION: A universal command that forces all devices on the HP-IB to return to a known reset state.

FORMAT: <ATN> <P0010100>

P1 = Parity Bit for all HP-IB commands

SELECTED DEVICE CLEAR

FUNCTION: An HP-IB channel command that forces only currently addressed devices to return to a known reset state.

FORMAT: <ATN> <P01ADDRS> <ATN> <P0000100>

CHANNEL INDEPENDENT CLEAR

FUNCTION: The recommended clearing mechanism for channels other than HP-IB.

FORMAT: [0010YYYY] <00001000>

YYYY = unit number

CANCEL

FUNCTION: This command causes graceful termination of the transaction, leaving it in the reporting phase.

FORMAT: [0010YYYY] <00001001>

YYYY = unit number

Table 9-5. Device Transparent Command Summary (continued)

LOOPBACK

FUNCTION: Initiates a sequence to test channel integrity.

FORMAT: <0000001T> < P1 > .... < P4 >

Byte Length Parameter P1...P4
T = 0 Read Loopback Test - Host reads from Device
T = 1 Write Loopback Test - Host writes to Device

HP-IB PARITY CHECKING

FUNCTION: These commands are used to set up any channel specific interface parameters or operating conditions.

FORMAT: <00000001> <000000SV>

S = 0 Disable SRQ during poll (power-on state)
S = 1 Enable SRQ during poll
V = 0 Parity Checking disabled (power-on state)
V = 1 Parity Checking enabled

IDENTIFY

FUNCTION: This is a special-case HP-IB command used by the host at power-on to identify the devices connected to the bus.

FORMAT: <P1011111> <P11ADDRS>

The data returned will be 0268 HEX

Table 9-6. Tape Drive Utilities

Return HP 9145A Tape Information <21> Hex

This utility should be used to obtain that information that is specific to tapes loaded in the HP 9145A.

The format of the data returned by the drive (in bytes) is as follows (all numbers are in Decimal unless stated otherwise):

B0 = 20 - total number of bytes to be returned including B0 (allows for future extensions)

B1 = media loaded flag
00 - no tape loaded, 01 - tape loaded

B2 = media write-protected flag
00 - not write-protected, 01 - protected

This is only valid if the media loaded flag indicates that a tape is loaded. It only reflects the write-protect switch state, e.g. if a HC cartridge was present then this would not mean that the media write-protect flag would be set.

B3 = cartridge code
00 - HC
01 - XTD

B4 = cartridge format
00 - HP 9145A format (32 tracks)
02 - uninitialized tape - only formatted

B5 = compressed data code
00 - tape contains uncompressed data

B6-B19 = undefined at this time

(For multiple byte values, MSBs are in lower numbered bytes.)

It is possible that in future enhancements B0 may increase.

Table 9-6. Tape Drive Utilities (continued)

Return Powerfail Status <22> Hex

When the HP 9145A returns QSTAT = 2 for power on, it is possible that the drive had previously been powered off or had a power failure before writing all the host data from the drive's data buffer to tape. Data may have been LOST. This utility may be used to check whether host data has been lost due to power failure since the current cartridge was inserted or the last "Return_Powerfail_status" was issued.

The format of the data returned by this utility (in bytes) is as follows:

B0 = 7 - Total number of bytes of data including B0

B1 = Power Fail Status Flag
=0 if no power fail has occurred (this is the case on a QSTAT = 2 for a media load without power cycle)
=1 if a power fail occurred but no tape was loaded (could be present/unloading but not loaded)
=2 if a power fail occurred and a tape was loading or loaded AND the tape was SUCCESSFULLY loaded during powerfail recovery procedures in the drive
=3 if a power fail occurred and a tape was loaded but the power power fail load FAILED for some reason

B2 = Power Fail Data Loss Flag
=0 if no data was lost during the last power down/fail
=1 if host data in the buffer was not written to tape due to the last power down/fail
=2 if the spares table was not able to be updated on tape after the last power down/fail. This should only occur if write retries fail.

B3-B6 = Address of First Host Block Not Written To
If B2 = 0 or 2, this will be 0.

If B2 = 1, then this is the logical block address of the first block not written to tape due to the power failure. (MSB ... LSB)

Table 9-6. Tape Drive Utilities (continued)

Read Drive Tables <C4> Hex

One of three drive tables is returned to the Host based on the micro-opcode which follows the utility opcode.

a. Manufacturer's block <0A> Hex

This table is written by 3M when the tape is formatted. It contains manufacturer's information about the tape. Unlike the other blocks on the tape it is written in the same direction on all tracks (moving towards EOT) between keys zero and one.

The format of the table is:

<cr><lf> DC6xxHC xx = 00 for the long tape
                  15 for the short tape
<cr><lf> 4096 or 1024
<cr><lf>FORMAT () 1980, MINN. MINING & MFG.CO.
<cr><lf> ZABBBCDDEEFFGGHH
<cr><lf><esc>

<cr> represents a carriage return character
<lf> Line Feed
<esc> Escape
ZABBBC is the manufacturers control code
DDEEFFGGHH is the Date code

The cartridge identification code (ZABBBCDDEEFFGGHH) contains both numeric and alphabetic characters and is unique for each cartridge.

Table 9-6. Tape Drive Utilities (continued)

b. Spares Table <0B> Hex

The blocks which have been spared either by Certification, Autosparing or by the Host issuing a Spare Block command are returned. The format of the data is as follows :

Number of entries ..... 2 bytes
Table record
  Key number ..... 2 bytes
  Track ..... 1 byte

Key number and track number are repeated for each entry.

Note that the table returned in response to this utility shows only bad blocks that have been spared out. It does not show blocks that have been reserved as spares.

c. Copy Start Address <0C> Hex

If this command is sent to the Tape Drive, illegal parameter will be set in the Request status summary.

Read Cumulative Runtime Error Log <C5> Hex

(also referred to as Error Log or just Runtime Log.)

This utility returns to the Host the Cumulative Runtime Error Log, which is an ACCUMULATION of runtime errors detected by the drive since the last Clear Logs command. This accumulated total of runtime errors gives some indication of media/tape drive performance.

The format of the cumulative runtime error log is shown next.

Number of records ..... 1 byte
Number of uncorrectable read errors ..... 1 byte
Number of key errors ..... 1 byte
Type of certification ..... 1 byte
Number of blocks spared on write ..... 2 bytes
Number of correctables with retries ..... 2 bytes
Number of correctables without retries ..... 2 bytes

The HP 9145A will not "roll over" any of these counts during operation. If the number of correctables without retries becomes "65535", for instance, then it will remain like that until the log is cleared - it will not roll to "0" on the next error.

Table 9-6. Tape Drive Utilities (continued)

The type of certification byte can have the following decimal values:

0 - not certified
1 - 3M certified
2 - HP factory certified
4 - 7914 Drives certified
8 - HP 35401A/HP 9144A certified
16 - HP 9145A certified

Only uncorrectable, spared blocks and key errors have their addresses logged. The number of addresses logged is held In the number of records byte. This can be up to 250 entries. Each address entry is of the form:

Logical address - 3 bytes (MSB .. LSB)
Error byte - 1 byte. <7 6 5 4 3 2 1 0>

The error byte is a bit map with bits 0 - 5 corresponding to Frames 1 - 6. A "1" in any of these positions indicates that the frame had a CRC error. Bit 6 is set if the data is uncorrectable. Bit 7 is set if there was a Key error.

The address entries in this log are stored internally as physical addresses. When the log is requested by the host via this command, the addresses are converted to logical addresses. Due to sparing, not all physical addresses have corresponding logical addresses, so some addresses cannot be converted and will not be returned. This is reflected In the number of records byte.

If no runtime errors are recorded, or if the log has not been written to tape or cannot be read, all 0s will be returned.

Table 9-6. Tape Drive Utilities (continued)

Read Error Rate Test Log <C6> Hex

11000110	00000000
Micro-opcode	Parameter = 0

The ERT Data Error Log is the standard log for all errors found while executing the Pattern Error Rate Test. The log is composed of a header which contains the number of blocks accessed and error counts, and records which contain relevant addresses and error qualifiers. This log contains data and key errors, and is kept separate from the Runtime Error Log so that cumulative errors are not a concern during testing. Records are kept for permanent errors (correctable and uncorrectable) and key errors.

Log Format:

LOG HEADER

No of records ..... 2 bytes
No of blocks accessed ..... 4 bytes
No of permanent errors ..... 2 bytes
No of transient errors ..... 2 bytes
No of uncorrectable errors ..... 1 byte
No of permanent key errors ..... 1 byte

Address entries - 4 bytes for each of the records. Each entry is of the form:

Logical address ..... 3 bytes (MSB, LSB)
Error byte ..... 1 byte <7 6 5 4 3 2 1 0 >

The Error byte is a bit-map with bits 0 - 5 corresponding to Frames 1-6. A **1** in any of these positions indicates that the frame had a CRC error. Bit 6 is set if the data is uncorrectable. Bit 7 is set if there was a Key error.

Read Use Log <C7> Hex

This utility returns the tape Use Log to the Host. This log is never cleared so that an accurate record of all tape usage is recorded here. Note that it is not possible to update this log if the tape is write-protected and thus all sessions may not be reflected in this log. The format of the Use Log appears next.

Number of times tape was loaded .... 2 bytes
Reserved for future use ..... 4 bytes (set to 0s)

Also if the tape drive receives a Clear command, all the accumulated data not written to the tape is lost.

Table 9-6. Tape Drive Utilities (continued)

Pattern Error Rate Test <C8> Hex

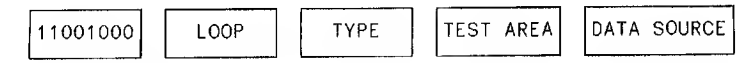

Parameter Definition:

LOOP ⇒ 0-255 = Loop Count

TYPE ⇒ 00 = Read Only ERT
01 = Write/Read ERT
02 = Certification (Read-while-write with bad blocks spared after test done)

TEST AREA ⇒ 00 = Use Current Address & Current Length (Logical)

X1 = Use Current and Next Track Test is performed starting on first block of track X and continues for the length of 2 tracks. All blocks on two tracks are tested.

X3= Use track X + 16 and X + 17 (second set of 16 tracks). Similar to X1, but second set of tracks.

02 = Entire Tape (Physical)

DATA SOURCE ⇒ 0-255 Defines data source
00 = Use Internal Pattern Table (1 pattern corresponding to loop number modulo 8)
01 = Use User Defined Pattern (patterns received via the Receive User Pattern Utility)
02 = Use Random Data
03 = Use FF - MFM2F pattern
04 = Use 55 - MFM1F pattern
05 = Use F5 - peak shift pattern
06 = Use FFFFF5 - extended peak shift pattern

Table 9-6. Tape Drive Utilities (continued)

Clear Logs <CD> Hex

This utility clears the following logs, identified by the parameter byte.

0 - Clear the Error Rate,Transient Test
AND the Runtime Error Logs

1 - Clear the Error Rate Log and Transient Test

On a write-protected tape, this only clears RAM copies of the logs.

Preset Drive <CE> Hex

When the drive receives this utility, it updates all Logs on tape if they need updating.

Receive User Pattern <D1> Hex

This utility allows the Host to send 64 bytes of data which are replicated 16 times (1k total) per block of data written to the tape. This utility is used in conjunction with the Pattern Error Rate Test.

Read Memory <30> Hex <Address> <Length>

Takes 6 parameter bytes (MSB...LSB). The Address takes 3 bytes and the Number Of Bytes takes 3 bytes. Returns Number Of Bytes of data from the uP global data memory only to the Host, starting at memory address supplied.

Set R/W Threshold <37> Hex

Allows the Host to set the gain of the Read channel amplifier. The parameter byte is the gain value in hexadecimal.

CAUTION

THIS COMMAND MAY HAVE CATASTROPHIC RESULTS.

Table 9-6. Tape Drive Utilities (continued)

Set Retry Mode <3B> <XX> Hex

Allows the Host to specify one of four Retry modes, where XX =

<00> Retry blocks with two or more single permanent errors which cause the data to be unrecoverable until the data is recoverable, or the retry count expires. Retry bad keys as well. Perform auto-sparing as needed for writes based on the current options byte.

<01> **Same as <00>.**

<02> **Retry and spare write errors - Default Mode.**
Same as <00>, except that any block with an error will be spared out during a write operation, if the retry count expires. This is known as higher reliability mode - no frame errors are knowingly left on the tape during the write process.

<03> **Same as <00>.**

Read Device Use Logs <6E> Hex

Returns the contents of the device use logs. These logs give an indication of the amount of use the HP 9145A has sustained since the logs were last cleared.

The format of the data returned is as follows:

Total Power Cycles	2 bytes
Total Power On Time (in seconds)	4 bytes
Total Tape Loads Completed	2 bytes
Total Cartridge Cleaning Cycles	2 bytes
Total Unit Faults	4 bytes
Last Diagnostic To Fail	1 byte
Total Number of Diagnostic Failures	2 bytes
Overflow Byte	1 byte

TOTAL: 18 bytes

Table 9-6. Tape Drive Utilities (continued)

Return Fault Log <32> Hex

This returns the Fault Log for the drive to the host. This log contains a list of the most recent drive errors (DERRORS). The format of the data returned by this utility (in bytes) is as follows:

First 2 bytes	Number of DERROR entries following these bytes - up to 150 entries.

Each DERROR entry is 6 bytes long and has the following structure:

B0 =	DERROR number - actual error number
B1 =	DERROR post byte - provides extra information about the error
B2-B5 =	Time since the drive was switched on in milliseconds (B2 is MSB)

The time stamping allows the user of this utility to put the DERRORs returned into true perspective and should greatly assist hardware debugging. The drive uses the fault log as a circular list; once the log is full, it begins overwriting the oldest entries automatically without host intervention.

Clear Device Use Logs <6F> Hex

The non-volatile usage log values are all set to zero. Note that as this command erases all device historical records, it is not intended to be generally used except at initial (factory) switch on.

The logs cleared are as defined under the Read_Use_Logs utility.

Table 9-6. Tape Drive Utilities (continued)

Read Sensors <70> Hex

This utility returns two bytes of data. The first byte is a bitmap indicating the state of the sensors/switches.

The bitmap is as follows:

Bit	Function
0 (LSB)	Cartridge Present Switch
1	Write-Protect Switch
2	Unload Button
3	Self-Test Button
4	Display Self-Test Results Button

All switches/sensors are active high ("1" when active).

The second byte returned is present for future expansion.

Read Revisions Number <C3> Hex

This utility returns the firmware revision number to the Host. Four bytes of data are returned.

The first byte is 3 in the HP 9145A, indicating that there are three bytes of data following. The second byte holds the revision number for the HP 9145A CONTROLLER code. The third byte contains the revision number of the HP 9145A DDC microprocessor code, and the fourth byte contains the revision number of the HP 9145A SERVO code.

Each revision number is a 7 bit decimal number corresponding to the revision. The first revision starts at "1".

Revision numbers of the firmware will be displayed on the rear diagnostic LEDs as letters, e.g. a revision byte of "3" will be displayed as "C".

Table 9-6. Tape Drive Utilities (continued)

Read Transient error log <E0> Hex

Transient errors are those read/write errors the drive encounters and overcomes by retries.

When a pattern error rate test is executed, the HP 9145A will log all transient errors that occur. These will NOT be saved on tape as there is insufficient space to do that. However, the data is available from the drive until the next power cycle, clear logs or error rate test is performed.

The format of the log is as follows:

Number of records ... 1 byte
Number of transient errors ... 2 bytes
Address entries - 4 bytes for each of number of records, up to 250 entries.

9.9 Hewlett-Packard Interface Bus

The Hewlett-Packard Interface Bus (HP-IB) provides a standardized method of connecting separate devices (see **figure 9-2**). The HP-IB permits transfer of commands and data between the components of a system on 16 signal lines. The interface functions for each system component are performed within the component so only passive cabling is needed to connect the system. The cable connects all controllers and other devices of the system in parallel.

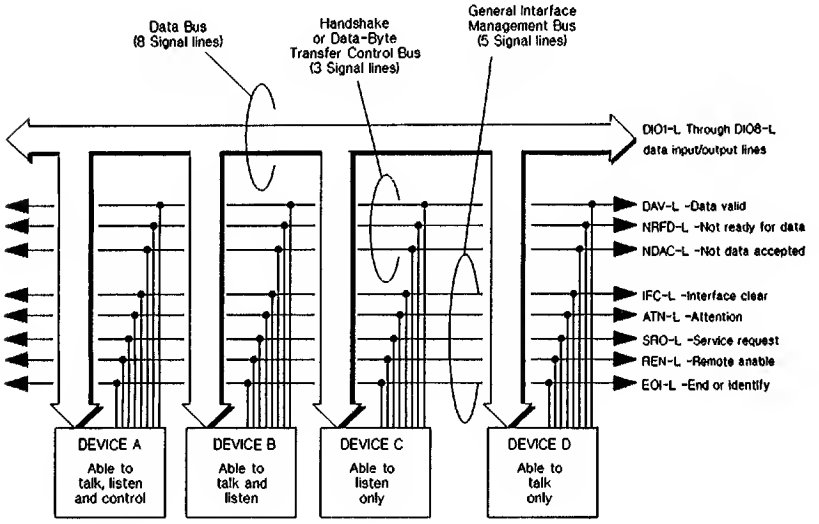

Figure 9-2. Hewlett-Packard Interface Bus Signal Lines

The Hewlett-Packard Interface Bus (HP-IB) has certain rules which must be followed for successful installation of the Tape Drive. Cabling is limited to 1 meter per HP-IB load. Typically the Central Processing Unit (CPU) is 7 equivalent loads and the Tape Drive is 1 equivalent load.

The CPU adheres to an HP standard which allows 7 meters of HP-IB cable between the CPU and the nearest device connected to it and 1 meter of cable between each additional device. The maximum configuration is eight devices (not including CPU) per HP-IB channel or a maximum of 15 meters or 15 equivalent loads.

The eight Data I/O lines are reserved for the transfer of commands, data, and other messages in a Byte-serial, bit-parallel manner. Data and message transfers are asynchronous, coordinated by three handshake lines: Data Valid (DAV-L), Not Ready For Data (NRFD-L), and Not Data Accepted (NDAC-L). The other five lines are for bus management.

Information is transmitted on the data lines under sequential control of the three handshake lines (DAV-L, NRFD-L and NDAC-L). No step in the sequence can be initiated until the previous step has been completed. Information transfer can proceed as fast as devices can respond, but no faster than allowed by the slowest

device presently addressed. This permits several devices to receive the same message byte concurrently.

Devices connected to the bus may be talkers, listeners, or controllers (refer to **table 9-7**). The Controller-In-Charge (CIC) dictates the role of each of the other devices by setting the Attention (ATN-L) line low and sending talk or listen addresses on the data lines. Addresses are set for each device at the time of system configuration. While the ATN-L line is low, all devices must listen to the data lines. When the ATN-L line is high, devices that have been addressed will send or receive data; all others ignore the data lines. Several listeners can be active simultaneously but only one talker can be active at a time. Whenever a talk address is put on the data lines (while ATN-L is low), all other talkers will be automatically unaddressed.

The Interface Clear (IFC-L) line places the interface system in a known quiescent state. The Remote Enable (REN-L) line is used to select between two alternate sources of device programming data such as the Front Panel or the HP-IB. The End Or Identify (EOI-L) line is used to indicate the end of a multiple-byte transfer sequence. In addition, when a controller-in-charge sets both the ATN-L and EOI-L lines low, each device capable of a parallel poll responds on the DIO line assigned to it.

Table 9-7. HP-IB Definitions

HP-IB Term	Definition	Considerations
TALKER	Any device which sends information over the HP-IB.	There can be only one TALKER sending information over the HP-IB at a time.
LISTENER	Any device which receives information over the HP-IB. Some devices can function as LISTENERS or TALKERS.	In a parallel poll system, there can be up to 8 LISTENERS receiving information over the HP-IB at the same time.
CONTROLLER	Any device that has been programmed to manage data flow between the TALKER and the LISTENER(s) in addition to being a TALKER and a LISTENER.	The CONTROLLER manages data flow by addressing one device as a TALKER and one or more devices as LISTENERS. There can be only one active CONTROLLER on the HP-IB at any time. The active CONTROLLER is called the CONTROLLER-IN-CHARGE (CIC).
SYSTEM CONTROLLER	Any device that functions as a CONTROLLER and is able to gain absolute control of the HP-IB with the Interface Clear (IFC) signal.	There can be only one SYSTEM CONTROLLER connected to the HP-IB.

9.10 HP-IB Communications

This section describes the formats and sequences for the HP-IB commands, messages and transactions that occur between the Controller-In-Charge (CIC) and the Tape Drive. The following list explains the terms used in this section.

COMMAND - A parcel of information transmitted over the channel (HP-IB) relating to a specific operation. Channel commands (usually a single byte) are used to manage operations on the interface channel. Device commands (usually more than one byte) are used to control the operation and are contained within the text of a command message.

UNIVERSAL COMMAND - A channel command that causes all devices on the bus to perform a predetermined interface function. The format is ATN [P001CCCC] where P is a parity bit and CCCC is the command code.

PRIMARY COMMAND - The primary I command is a channel command that begins the message sequence. It contains the command to listen or talk and the address of a particular device. The primary II command terminates the message with an unlisten or untalk command.

SECONDARY COMMAND - The secondary command sets up the action required of the Tape Drive in the text of the message.

TEXT - The text of the message can be 1 to n bytes depending on the required action. The required action can be to receive further qualifying information or instructions (such as a device command), to receive write data, to send read or status data, or to perform a specific operation such as a CLEAR.

MESSAGE - A unique sequence of command and text bytes transmitted over the channel during which the communication link between the devices (for example, CIC and the Tape Drive) remains unbroken.

COMMAND MESSAGE - A single message containing all the information required to address a device and initiate an operation, set up a programmable parameter, or set up an operation to be executed by an execution message.

EXECUTION MESSAGE - A single message containing all the information required to carry out an operation previously set up by a command message.

TRANSACTION - A complete process or operation carried out over the channel. Some transactions are completed with only a command/report message, and some require a command, execution, and a reporting message.

9.11 Channel Management

The following techniques are used by the CIC to manage the HP-IB: Parallel Poll and Universal Device Clear.

9.12 Parallel Poll

The CIC conducts a parallel poll on the HP-IB by asserting ATN-L and EOI-L simultaneously. Each device requiring service can then respond by asserting the DIO line corresponding to its address. The CIC then addresses only the device requiring service. If more than one device requires service, the CIC addresses the device with the highest priority (lowest address) first. Parallel Poll Enable (PPE) and Parallel Poll Disable (PPD) are internal states of the Tape Drive controller.

PPE occurs when the Tape Drive requires service from the CIC. PPD is the opposite state and occurs whenever the Tape Drive is active (for example, busy executing a command) or idle. A Parallel Poll Response (PPR) from the Tape Drive will occur if the CIC asserts both ATN-L and EOI-L and if the Tape Drive is in the PPE state.

9.13 Universal Device Clear

A universal command is a channel command that causes all devices on the HP-IB to perform a predetermined interface function. Universal Device Clear places the Tape Drive in a known reset state.

9.14 Message Structure

Each message contains the following components (refer to table 9-8).

- Primary I Command
  (unidirectional from CIC to device)

- Secondary Command
  (unidirectional from CIC to device)

- Text (bi-directional)

- Primary II Command
  (unidirectional from CIC to device)

The CIC asserts ATN-L during primary and secondary commands to distinguish them from text information. The Tape Drive decodes the information contained in both the primary I and secondary commands to prepare for action specified in the text.

Table 9-8. HP-IB Message Structure

Header		Text	Trailer
Primary I	Secondary	Device Command or Data	Primary II
[ATN] [ONE BYTE] • Unidirectional *CIC to device • Begins message *Addresses device to LISTEN or TALK *Universal	[ATN] [ONE BYTE] • Unidirectional *CIC to device • Set up device for further action	• Bidirectional • Qualifying instructions to device • Write data to device • Read data to CIC • Status data to CIC	[ATN] [ONE BYTE] • Unidirectional *CIC to device • Terminates message • Unaddresses device *Unlisten *Untalk

9.15 Run-Time Drive Errors

The following is a list of abbreviations used in the Run-Time Drive Errors (DERRORS) Table.

List Of (DERRORS) Abbreviations

ABS	Absolute
EBOT	End or Beginning of Tape
FIFO	Data Buffer
IPC	Inter-Process Communication
MCU	Micro-Controller Unit
PEP	Pre-emptive Positioning
PREPOS	Pre-positioning
RERT	Read Error Rate Test
REV	Reverse
SS	Single Shot
TSM	Test Servo Motor
WERT	Write Error Rate Test

Table 9-9. Run-Time Drive Errors (DERRORS).

HEX No.	SCREEN MESSAGE	SUSPECT AREA
A001	WRITE LOGS FAILED DURING UNLOAD (ACDBF)	ACDBF
A006	LOAD FAILED (ACDBF)	ACDBF
A007	UNLOAD FAILED (ACDBF)	ACDBF
A00C	EDGEFIND THRESHOLD ABOVE UPPER LIMIT (ACDBF)	ACDBF
A00E	CALCULATED THRESHOLD AVERAGE TOO LOW (ACDBF)	ACDBF
A00F	THRESHOLD VALUES OUT OF RANGE (ACDBF)	ACDBF
A010	CALC THRESHOLD SECOND AVERAGE TOO LOW (ACDBF)	ACDBF
A011	THRESHOLD VALUES OUT OF TIGHTER RANGE (ACDBF)	ACDBF
A016	SERVO FAILED TO SET SPEED TO 90IPS (BD)	BD
A017	SERVO FAILED TO SET SPEED TO 120IPS (BD)	BD
A018	DDC FAILED TO SET SPEED TO 90IPS (F)	F
A019	DDC FAILED TO SET SPEED TO 120IPS (F)	F
A023	READ MANU LOG SPEED CONFLICT (AB)	AB
A100	DDC DIAGNOSTIC 1 FAILED (F)	F
A101	DDC DIAGNOSTIC 2 FAILED (F)	F
A102	DDC DIAGNOSTIC 3 FAILED (F)	F

Key to Suspect Area

A. Media
B. Drive Mechanism (part of the Tape Transport Assembly)
C. Read/Write & Servo PCA (part of the Tape Transport Assembly)
D. Interface between Read/Write & Servo PCA and Controller PCA
E. Interface between Drive Mechanism and Read/Write & Servo PCA
F. Controller PCA
G. Firmware bug
H. Caused by previous error
U. User error

Table 9-9. Run-Time Drive Errors (DERRORS) continued.

HEX No.	SCREEN MESSAGE	SUSPECT AREA
A103	DATA CORRUPTION IN DDC LOOPBACK (F)	F
A104	BAD XOR FRAMES IN DDC LOOPBACK (F)	F
A105	SERVO DIAGNOSTIC 6 FAILED (FCD)	FCD
A106	SERVO DIAGNOSTIC 7 FAILED (CBD)	CBD
A107	SERVO DIAGNOSTIC 8 FAILED (CBD)	CBD
A108	SERVO TSM COMMAND FAILED (CBD)	CBD
A109	SERVO PROBLEM IN DIAGNOSTIC 9 (CBD)	CBD
A10A	DIAGNOSTIC 13 FAILED (CDBFA)	CDBFA
A10B	DIAGNOSTIC 14 FAILED (CDBFA)	CDBFA
A10C	DIAGNOSTIC 15 FAILED (CDBFA)	CDBFA
A113	DIAGNOSTIC 22 FAILED (CDFB)	CDFB
A114	DIAGNOSTIC 23 FAILED (CDFB)	CDFB
A115	DIAGNOSTIC 24 FAILED (CDFB)	CDFB
A117	DATA CORRUPTION IN WRITE LOOPBACK TEST (CDFB)	CDFB
A200	CHECK MANU LOG FAILED (AF)	AF
A201	READ MANU LOG FAILED (DCBAF)	DCBAF

Key to Suspect Area

A. Media
B. Drive Mechanism (part of the Tape Transport Assembly)
C. Read/Write & Servo PCA (part of the Tape Transport Assembly)
D. Interface between Read/Write & Servo PCA and Controller PCA
E. Interface between Drive Mechanism and Read/Write & Servo PCA
F. Controller PCA
G. Firmware bug
H. Caused by previous error
U. User error

Table 9-9. Run-Time Drive Errors (DERRORS) continued.

HEX No.	SCREEN MESSAGE	SUSPECT AREA
A202	READ SPARES TABLE FAILED (ADCBF)	ADCBF
A206	SPARES TABLE UNRECOGNISED (ADCBF)	ADCBF
A207	TAPE ID DIFFERS FROM LAST LOAD (User. DCBAF)	UDCB
A301	SPARES TABLE INVALID (F)	F
A305	WRITE LOG TO TAPE FAILED (DCBFA)	DCBFA
A306	WRITE SPARES TO FIFO FAILED (F)	F
A308	WRITE FIFO SPARES TO TAPE FAILED (DCBFA)	DCBFA
A400	NO MORE ALLOCATABLE SPARES (ADCBF)	ADCBF
A402	SPARING FAILURE (ADCBF)	ADCBF
A404	NO SUITABLE JUMP SPARE (ADCBF)	ADCBF
A405	JUMP SPARING FAILED TO ALLOCATE SPARE (ADCBF)	ADCBF
A407	JUMP AND SKIP USED SAME SPARE (GFDA)	GFDA
A408	NUMBER OF USED SKIPS DO NOT AGREE (GFDA)	GFDA
A409	NUMBER OF USED JUMPS DO NOT AGREE (GFDA)	GFDA
A40A	SKIP SPARES TABLE NOT IN ASCENDING ORDER (GFDA)	GFDA
A40B	JUMP SPARES TABLE NOT IN ASCENDING ORDER (GFDA)	GFDA

Key to Suspect Area

A. Media
B. Drive Mechanism (part of the Tape Transport Assembly)
C. Read/Write & Servo PCA (part of the Tape Transport Assembly)
D. Interface between Read/Write & Servo PCA and Controller PCA
E. Interface between Drive Mechanism and Read/Write & Servo PCA
F. Controller PCA
G. Firmware bug
H. Caused by previous error
U. User error

Table 9-9. Run-Time Drive Errors (DERRORS) continued.

HEX No.	SCREEN MESSAGE	SUSPECT AREA
A40C	SKIP SPARE TABLE INCORRECT (GFDA)	GFDA
A40D	JUMP SPARE TABLE INCORRECT (GFDA)	GFDA
A40E	CHECKSUM ERROR (GFDA)	GFDA
A600	BUILD SPARES FAILED (DFCBA)	DFCBA
A604	TOO FEW SPARES ON CERTIFY ERROR (ABDCF)	ABDCF
A605	UNCORRECTABLE ON CERTIFY ERROR (ABDCF)	ABDCF
A606	TOO MANY KEY ERRORS TO CERTIFY (ABDCF)	ABDCF
A607	SPARES TABLE OPTIMIZATION FAILED (F)	F
A608	CERTIFY FAILED THRESHOLD TOO HIGH (ACDB)	ACDB
B000	SET CHANNEL SEPARATION FAILED(parm) (BCD)	BCD
BA00	DDC DIAGNOSTIC 4 FAILED(parm) (F)	F
BB00	DDC DIAGNOSTIC 5 FAILED(parm) (F)	F
BC00	UTILITY FAILED(parm) (FDCBA)	FDCBA
BF00	PREPOS READ HEAD FAILED RETRY(parm) (CDBFA)	CDBFA
C000	PREPOS WRITE HEAD FAILED RETRY(parm) (CDBFA)	CDBFA
DF00	FAILED TO CONVERT ERT ADDRESS	

Key to Suspect Area

A. Media
B. Drive Mechanism (part of the Tape Transport Assembly)
C. Read/Write & Servo PCA (part of the Tape Transport Assembly)
D. Interface between Read/Write & Servo PCA and Controller PCA
E. Interface between Drive Mechanism and Read/Write & Servo PCA
F. Controller PCA
G. Firmware bug
H. Caused by previous error
U. User error

Table 9-9. Run-Time Drive Errors (DERRORS) continued.

HEX No.	SCREEN MESSAGE	SUSPECT AREA
DF01	FAILED TO ALLOCATE SPARE BLOCK	
DF02	ILLEGAL HEAD ADDRESS FOR LOGICAL CONVERSION	
DF03	TAIL IN COMMAND PHASE BEFORE LOGICAL CONVERSION	
DF04	HEAD COMMAND STATUS ERROR IN POSITION CHECK	
DF05	TARGET IMMINENT BAD STATUS	
DF06	TAIL COMMAND STATUS ERROR IN TAPE POS CHECK	
DF07	TAIL COMMAND COMPHASE ERROR IN POSITION CHECK	
DF08	COMMAND TRACK NUMBER OUT OF RANGE	
DF09	COMMAND KEY NUMBER OUT OF RANGE	
DF0A	MAINTENANCE TRACK OVERFLOW	
DF0B	FAILED TO SCRAMBLE MAINTENANCE BLOCK	
DF0C	NO SYNTHETIC HEAD COMMAND STATUS	
DF0D	ERT ADDR CONVERT FOR COMMAND SYNTHESIS FAILED	
DF0E	UNKNOWN REASON FOR DDC ABORT	
DF0F	FATAL READ DUE TO DISABLED RETRIES	
DF10	TRACK PROBLEM DURING WRITES	

Key to Suspect Area

A. Media
B. Drive Mechanism (part of the Tape Transport Assembly)
C. Read/Write & Servo PCA (part of the Tape Transport Assembly)
D. Interface between Read/Write & Servo PCA and Controller PCA
E. Interface between Drive Mechanism and Read/Write & Servo PCA
F. Controller PCA
G. Firmware bug
H. Caused by previous error
U. User error

Table 9-9. Run-Time Drive Errors (DERRORS) continued.

HEX No.	SCREEN MESSAGE	SUSPECT AREA
DF11	FATAL WRITE DUE TO RETRIES DISABLED	
DF12	SPARING LIMIT EXCEEDED FATAL WRITE	
DF13	TOO MANY READ RETRIES	
DF14	TRIED TO WRITE TO MANUFACTURERS BLOCK	
DF15	BYTE COUNT OUT OF RANGE	
DF16	ERROR TRYING TO SEND DDC COMMAND	
DF17	FAILED TO SEND TEST DDC MCU COMMAND	
DF18	FAILED TO READ DDC MCU SELFTEST REPORT	
DF19	FAILED TO CLEAR UTILITY STATUS	
DF1A	FAILED TO SEND DDC TEST REG COMMAND	
DF1B	FAILED TO READ DDC TEST REG REPORT	
DF1C	FAILED TO SEND THE DDC A RESET	
DF1D	FAILED TO READ DDC RESET REPORT	
DF1E	DDC SENT A NON RESET REPORT FOR A RESET COMMAND	
DF1F	DDC RECOVERED DEAD DUE TO ABORT STATUS	
DF20	SERVO STOP PROBLEM IN DDC RECOVERY	
DF21	RECOVERY TIMEOUT DDC ACCEPTING COMMANDS	
DF22	RECOVERY TIMEOUT DDC NOT ACCEPTING COMMANDS	
DF23	RECOVERY TIMEOUT NO RESET SENT	

Key to Suspect Area

A. Media
B. Drive Mechanism (part of the Tape Transport Assembly)
C. Read/Write & Servo PCA (part of the Tape Transport Assembly)
D. Interface between Read/Write & Servo PCA and Controller PCA
E. Interface between Drive Mechanism and Read/Write & Servo PCA
F. Controller PCA
G. Firmware bug
H. Caused by previous error
U. User error

Table 9-9. Run-Time Drive Errors (DERRORS) continued.

HEX No.	SCREEN MESSAGE	SUSPECT AREA
DF24	FAILED TO SEND DDC SET KEY COUNTER COMMAND	
DF25	FAILED TO SET DDC MODE TRACK DIR	
DF26	DDC READY TIMEOUT AFTER MODESET	
DF27	ILLEGAL HEADCOM STATUS FOR READWRITE	
DF28	ILLEGAL TAILCOM STATUS FOR READWRITE	
DF29	TIMEOUT IN SENDING DDC TRACK AND DIR COMMAND	
DF2A	TIMEOUT IN SENDING DDC MODES	
DF2B	DDC SET UP FOR RETURN KEY FAILED	
DF2C	FAILED TO SEND DDC RETURN KEY COMMAND	
DF2D	FAILED TO GET REPORT ON DDC RETURN KEY (F)	F
DF2E	TOO MANY DDC ABORTS FOR GET KEY 1 (ABECDF)	ABEC DF
DF2F	FAILED TO QUICK RESET THE DDC IN GET KEY (F)	F
DF30	TOO MANY DDC ABORTS FOR GET KEY 2 (ABECDF)	ABEC DF
DF31	FAILED TO READ DDC PHASE1 READ REPORT (F)	F
DF32	FAILED TO READ DDC PHASE1 WRITE REPORT (F)	F
DF33	FAILED TO READ DDC PHASE2 READ REPORT (F)	F
DF34	DDC DID NOT ABORT A READ AFTER BAD COUNT STAT (F)	F

Key to Suspect Area

A. Media
B. Drive Mechanism (part of the Tape Transport Assembly)
C. Read/Write & Servo PCA (part of the Tape Transport Assembly)
D. Interface between Read/Write & Servo PCA and Controller PCA
E. Interface between Drive Mechanism and Read/Write & Servo PCA
F. Controller PCA
G. Firmware bug
H. Caused by previous error
U. User error

Table 9-9. Run-Time Drive Errors (DERRORS) continued.

HEX No.	SCREEN MESSAGE	SUSPECT AREA
DF35	FAILED TO READ DDC PHASE2 WRITE REPORT (F)	F
DF36	SERVO STOP STATUS TRYING TO UPDATE ABS POS (G)	G
DF37	SERVO STOP STATUS TRYING TO UPDATE POSITION (G)	G
DF38	ILLEGAL COMMAND FROM BUFFER (G)	G
DF39	IPC ERROR TRYING TO GET A BUFFER COMMAND (FG)	FG
DF3A	CANT REPORT BECAUSE HEAD COMMAND EMPTY (G)	G
DF3B	NO COMMANDS IN DEVICE TO REPORT (G)	G
DF3C	UNIDENTIFIABLE COMMAND TO REPORT (G)	G
DF3D	UNSTABLE SERVO STATUS (DCF)	DCF
DF3E	DATA FIFO POINTER OUT OF RANGE (G)	G
DF3F	ILLEGAL HEADCOM STATUS FOR DMA SET UP (G)	G
DF40	SERVO ERROR MOVING TO TRACK 0 (BECDF)	BEC DF
DF41	FAILED TO KICK OFF DDC DMA FOR TAILCOM (F)	F
DF42	NO INTERNAL END DESPITE TRANSFER COMPLETE (FG)	FG
DF43	DID NOT RUN OUT OF EOTBOT IN REV ANALYSIS (ABECDF)	ABEC DF
DF44	RECOVERY RESET FAIL IN POSIT RCV (F)	F
DF45	FAILED TO SEND DDC COMMAND (F)	F
DF46	SERVO NEVER ACKNOWLEGED COMMAND (DF)	DF

Key to Suspect Area

A. Media
B. Drive Mechanism (part of the Tape Transport Assembly)
C. Read/Write & Servo PCA (part of the Tape Transport Assembly)
D. Interface between Read/Write & Servo PCA and Controller PCA
E. Interface between Drive Mechanism and Read/Write & Servo PCA
F. Controller PCA
G. Firmware bug
H. Caused by previous error
U. User error

Table 9-9. Run-Time Drive Errors (DERRORS) continued.

HEX No.	SCREEN MESSAGE	SUSPECT AREA
DF47	CONFLICTING CONTROL INPUT TO SINGLE SHOT READ (G)	G
DF48	CONFLICTING CNTRL INPUT TO SINGLE SHOT WRITE (G)	G
DF49	SERVO TRACK STAT CNFLCTS WITH EXPCTD TRACK (DFG)	DFG
DF4A	FATAL SERVO STATUS IN MOVE FORWARD (BECDAF)	BECD AF
DF4B	SERVO MOVE FORWARD COMMAND SEND ERROR (DF)	DF
DF4C	FATAL SERVO STATUS IN MOVE REVERSE (BECDAF)	BECD AF
DF4E	FAILED TO SEND SERVO MOVE REVERSE (DF)	DF
DF4F	FAILED TO SEND SERVO STOP TAPE COMMAND (DF)	DF
DF50	ERROR IN STOPPING TAPE (DF)	DF
DF51	TIMEOUT WAITING FOR SERVO COMMAND COMPLETE (DF)	DF
DF52	COMMAND QUEING PROBLEM IN ERT INITIALISATION (G)	G
DF53	DATA FIFO OUT OF RANGE IN ERT INITIALISATION (G)	G
DF54	ADDRESS CONV'SION ERROR IN ERT INITIALISATION (G)	G
DF55	DDC UNRECOVERABLE FOR ERT (F)	F
DF56	READ ABORTED DUE TO BAD STAT (Due to prev err's.)	
DF57	BAD HEAD COMMAND FOR HOST READS (G)	G
DF58	NON READ TAIL COMMAND PRESENT FOR HOST READS (G)	G
DF59	DDC UNRECOVERABLE FOR HOST READS (F)	F

Key to Suspect Area

A. Media
B. Drive Mechanism (part of the Tape Transport Assembly)
C. Read/Write & Servo PCA (part of the Tape Transport Assembly)
D. Interface between Read/Write & Servo PCA and Controller PCA
E. Interface between Drive Mechanism and Read/Write & Servo PCA
F. Controller PCA
G. Firmware bug
H. Caused by previous error
U. User error

Table 9-9. Run-Time Drive Errors (DERRORS) continued.

HEX No.	SCREEN MESSAGE	SUSPECT AREA
DF5A	INACTIVE HEAD COMMAND FOR SS INITIALISE (G)	G
DF5B	FIFO POINTER OUT OF RANGE FOR SS READORWRITE (G)	G
DF5C	DDC UNRECOVERABLE FOR SS READORWRITE (F)	F
DF5D	WRITE ABORTED DUE TO BAD STATUS (H)	H
DF5E	UNIDENTIFIABLE WRITE RETRY MODE (G)	G
DF5F	BAD HEADCOM FOR HOST WRITES (G)	G
DF60	NON WRITE TAIL CMND PRESENT FOR HOST WRITES (G)	G
DF61	DDC UNRECOVERABLE FOR HOST WRITES (F)	F
DF62	FAILED TO RUN OUT OF EOTBOT IN FWD ANALYSIS (CDF)	CDF
DF63	TAPE POSITIONING ERROR (H)	H
DF64	FATAL REVERSE MOVE IN POSITIONING (ECDABF)	ECDA BF
DF65	FATAL FORWARD MOVE IN POSITIONING (ECDABF)	RE BF
DF66	TOO MANY STOPS IN TAPE POSITIONING (ABECDF)	ABEC DF
DF67	FATAL ATTEMPT TO STOP WHILST POSITIONING (CDF)	CDF
DF68	FATAL ERROR WHILST POSITIONING (H)	H
DF69	TIME OUT WAITG TO SATFY REV SEEK OFFSET (ABECDFG)	ABEC DFG

Key to Suspect Area

A. Media
B. Drive Mechanism (part of the Tape Transport Assembly)
C. Read/Write & Servo PCA (part of the Tape Transport Assembly)
D. Interface between Read/Write & Servo PCA and Controller PCA
E. Interface between Drive Mechanism and Read/Write & Servo PCA
F. Controller PCA
G. Firmware bug
H. Caused by previous error
U. User error

Table 9-9. Run-Time Drive Errors (DERRORS) continued.

HEX No.	SCREEN MESSAGE	SUSPECT AREA
DF6A	FATAL ERROR WAITING FOR REV CONDITIONS (ECDBF)	EC DBF
DF6B	FATAL SERVO ERROR IN STOPPED POSITIONING (ECDF)	ECDF
DF6C	FAILED TO RECOVER POSITION (H)	H
DF6D	ERROR GETTING AWAY FROM END OF TAPE (ECDABF)	ECDA BF
DF6E	TIMED OUT GETTING AWAY FROM EDGE (ECDABF)	ECDA BF
DF6F	GOT LOST TOO MANY TIMES IN GETAWAY (ABECDF)	ABEC DF
DF70	POSITION RECOVERY FAILURE IN GETAWAY (ABECDF)	ABEC DF
DF71	FATAL SERVO ERROR LOOKING FOR KEY (ECDABF)	ECDA BF
DF72	FATAL DDC ERROR LOOKING FOR KEY (F)	F
DF73	FATAL SERVO MOVING AWAY FROM BOT (ECDBAF)	ECDB AF
DF74	FATAL SERVO MOVING AWAY FROM EOT (ECDBAF)	ECDB AF
DF75	EOT BOT STATUS ERROR FOR ESCAPE (F)	F
DF76	TIMEOUT WAITING FOR BOT ESCAPE (F)	F

Key to Suspect Area

A. Media
B. Drive Mechanism (part of the Tape Transport Assembly)
C. Read/Write & Servo PCA (part of the Tape Transport Assembly)
D. Interface between Read/Write & Servo PCA and Controller PCA
E. Interface between Drive Mechanism and Read/Write & Servo PCA
F. Controller PCA
G. Firmware bug
H. Caused by previous error
U. User error

Table 9-9. Run-Time Drive Errors (DERRORS) continued.

HEX No.	SCREEN MESSAGE	SUSPECT AREA
DF77	TIMEOUT WAITING FOR EOT ESCAPE (F)	F
DF78	SERVO ERROR IN EBOT ESCAPE (ABECDF)	ABEC DF
DF79	TOO MNY DIRECTN CHNGS TRYING TO ESC EBOT (ABECDF)	ABEC DF
DF7A	FATAL ERROR IN REVERSE MOVE AWAY (ECBADF)	ECBA DF
DF7B	FATAL ERROR IN FORWARD MOVE AWAY (ECBADF)	ECBA DF
DF7C	FATAL ERROR IN MOVE AWAY (ECBADF)	ECBA DF
DF7D	CANT STEP DUE TO LOST HEAD POSITION (H)	H
DF7E	STEPPING ERR WHILE STEP TO HYSTERESIS POS (BECDF)	BEC DF
DF7F	STEPPING ERR WHILE STEP TO TARGET STEP (BECDF)	BEC DF
DF80	STOP TAPE ERROR WHILST STEPPING (ECDF)	ECDF
DF81	SERVO ERROR WHILST STEPPING (BECDF)	BEC DF

Key to Suspect Area

A. Media
B. Drive Mechanism (part of the Tape Transport Assembly)
C. Read/Write & Servo PCA (part of the Tape Transport Assembly)
D. Interface between Read/Write & Servo PCA and Controller PCA
E. Interface between Drive Mechanism and Read/Write & Servo PCA
F. Controller PCA
G. Firmware bug
H. Caused by previous error
U. User error

Table 9-9. Run-Time Drive Errors (DERRORS) continued.

HEX No.	SCREEN MESSAGE	SUSPECT AREA
DF82	POSITION RECOVERY FAILED DUE TO DEAD DDC (F)	F
DF83	POSITION RECOVERY END ESCAPE FAIL (ECDAF)	ECD AF
DF84	POSITION RECOVERY SERVO FAILURE (BECDF)	BEC DF
DF85	ATTEMPTED POSITIONING WITH NON R/W HEADCMND (G)	G
DF86	HEAD OR TAIL COMMANDS ACTIVE FOR PEP (G)	G
DF87	FAILED TO CONVERT LOGICAL ADDRESS FOR PEP (G)	G
DF88	UNEXPECTED POSITIONED STATUS IN PEP (G)	G
DF89	PRE EMPTIVE POSITIONING ERROR STATUS (H)	H
DF8A	FAILED TO SEND TEST SERVO COMMAND (CDF)	CDF
DF8B	FAILED TO GET SERVO TEST STATUS (CDF)	CDF
DF8C	FAILED TO SEND SERVO LOOPBACK COMMAND (CDF)	CDF
DF8D	FAILED TO SEND SERVO LOOPBACK BYTE (CDF)	CDF
DF8E	FAILED TO READ SERVO LOOPBACK BYTE (CDF)	CDF
DF8F	SERVO ALWAYS BUSY (CDF)	CDF
DF90	FAILED TO STOP TAPE TO RECOVER SERVO (BECDF)	BEC DF
DF91	SERVO FAILED DIAGNOSTICS (CDF)	CDF

Key to Suspect Area

A. Media
B. Drive Mechanism (part of the Tape Transport Assembly)
C. Read/Write & Servo PCA (part of the Tape Transport Assembly)
D. Interface between Read/Write & Servo PCA and Controller PCA
E. Interface between Drive Mechanism and Read/Write & Servo PCA
F. Controller PCA
G. Firmware bug
H. Caused by previous error
U. User error

Table 9-9. Run-Time Drive Errors (DERRORS) continued.

HEX No.	SCREEN MESSAGE	SUSPECT AREA
DF92	GOT LOST TOO MANY TIMES IN POSITIONING (ABECDF)	ABEC DF
DF93	MANY DIRECTN CHNGS GETNG AWAY FROM END (ABECDF)	ABEC DF
DF94	WISE MOVE FORWARD PROBLEM (BECDF)	BEC DF
DF95	WISE MOVE REVERSE PROBLEM (BECDF)	BEC DF
DF96	BAD DIRECTION TRYING TO GET AWAY FROM END (ACDF)	ACDF
DF97	UNSTABLE SERVO STATUS CHECK (CDF)	CDF
DF98	SERVO NOT BUSY DURING INIT (CDF)	CDF
DF99	UNSTABLE SERVO INIT STATUS (CDF)	CDF
DF9A	POSITION RECOVERY DDC MODESET FAIL (F)	F
DF9B	FATAL RERT DUE TO DISABLED RETRIES	
DF9C	UNSTABLE SERVO INIT STOP STATUS (DCF)	DCF
DF9D	BAD STOP AFTER BAD MOVE (CDFB)	CDFB
DF9E	FAILED TO STOP FOR TAPE MODEL INIT (CDFB)	CDFB
DF9F	FAILED TO RESTORE STATUS FOR SERVO RECOVERY (DCF)	DCF
DFA0	COULDNT SET DEFAULT TAPE SPEED (FDC)	FDC
DFA1	FAILED TO STEP TO TRACK DEAD CENTRE (BCDF)	BCDF

Key to Suspect Area

A. Media
B. Drive Mechanism (part of the Tape Transport Assembly)
C. Read/Write & Servo PCA (part of the Tape Transport Assembly)
D. Interface between Read/Write & Servo PCA and Controller PCA
E. Interface between Drive Mechanism and Read/Write & Servo PCA
F. Controller PCA
G. Firmware bug
H. Caused by previous error
U. User error

Table 9-9. Run-Time Drive Errors (DERRORS) continued.

HEX No.	SCREEN MESSAGE	SUSPECT AREA
DFA2	ERT RECOVERY INIT FAIL (FDC)	FDC
DFA3	WRITE INIT RECOVERY FAIL (FDC)	FDC
DFA4	SS INIT RECOVERY FAIL (FDC)	FDC
DFA5	READ INIT RECOVERY FAIL (FDC)	FDC
DFA6	HEAD STEP PROBLEM IN STOP (BECDF)	BEC DF
DFA7	STOP TAPE SPEED SWITCH PROBLEM (DFC)	DFC
DFA8	KEYFIND OR MODESET ERROR IN GETAWAY (F)	F
DFA9	FATAL SS OPERATION BAD GETAWAY (H)	H
DFAA	ERT ABORT FOR TOO MANY UNCORRECTABLES (ABECDF)	ABEC DF
DFAB	RECOVERY RESET FAIL IN ERT SHUTDOWN (CDF)	CDF
DFAC	RECOVERY RESET FAIL IN SS SHUTDOWN (CDF)	CDF
DFAD	RECOVERY RESET FAIL IN STREAMING SHUTDOWN (CDF)	CDF
DFAE	KEY MODE SET FAIL FOR FORWARD MOVE (F)	F
DFAF	KEY MODE SET FAIL FOR REVERSE MOVE (F)	F
E200	UNEXPECTED DDC FRAME KEY STAT IN ABORT(parm) (C)	C
E700	DDC ABORTED WITH FATAL STATUS(parm) (F)	F

Key to Suspect Area

A. Media
B. Drive Mechanism (part of the Tape Transport Assembly)
C. Read/Write & Servo PCA (part of the Tape Transport Assembly)
D. Interface between Read/Write & Servo PCA and Controller PCA
E. Interface between Drive Mechanism and Read/Write & Servo PCA
F. Controller PCA
G. Firmware bug
H. Caused by previous error
U. User error

Table 9-9. Run-Time Drive Errors (DERRORS) continued.

HEX No.	SCREEN MESSAGE	SUSPECT AREA
E800	UNIDENTIFIABLE DDC ABORT STATUS(parm) (F)	F
F000	DDC TEST REG ECHO BYTE(parm) (F)	F
F100	DDC TEST REG ECHO BYTE HI(parm) (F)	F
F200	DDC TEST REG REPORT LSB(parm) (F)	F
F300	DDC TEST REG REPORT MSB(parm) (F)	F
F400	ILLEGAL DDC PHASE1 READ REPORT(parm) (F)	F
F500	ILLEGAL DDC PHASE1 WRITE REPORT(parm) (F)	F
F600	ILLEGAL DDC PHASE2 WRITE REPORT(parm) (F)	F
F700	SERVO FAILED SELFTEST(parm) (CDF)	CDF
F800	SERVO LOOPBACK BYTE WRONG(parm) (DCF)	DCF
F900	SERVO INIT BAD STATUS(parm) (DCF)	DCF
FA00	UNIDENTIFIABLE SERVO STATUS(parm) (DCF)	DCF
FB00	SERVO INIT BAD STOP STATUS(parm) (DCF)	DCF
FC00	DDC SELFTEST REPORTED AN ERROR(parm) (F)	F

Key to Suspect Area

A. Media
B. Drive Mechanism (part of the Tape Transport Assembly)
C. Read/Write & Servo PCA (part of the Tape Transport Assembly)
D. Interface between Read/Write & Servo PCA and Controller PCA
E. Interface between Drive Mechanism and Read/Write & Servo PCA
F. Controller PCA
G. Firmware bug
H. Caused by previous error
U. User error

Comparison Between HP 9144A & HP 9145A

A

This appendix shows the main differences between the HP 9144A and the HP 9145A. It is intended to be used as a training update by C.E.s who are already familiar with all aspects of the HP 9144A.

The differences are summarised in Table A-1. For additional information, refer to the relevant sections of the manuals, or to the notes provided in this appendix.

Table A-1. Main Differences

Features	HP 9144A	HP 9145A
Tracks	16	32
Data Capacity (formatted)	67.1 Mbytes (600 ft cartridge) 16.7 Mbytes (150 ft cartridge)	133 Mbytes (600 ft cartridge) 33 Mbytes (150 ft cartridge)
Data Transfer Rate (Maximum sustained)	2 Mbytes/minute (Host dependent)	4 Mbytes/minute (Host dependent)
Read/Write Speed	60 inches/second	120 inches/second (32-track cartridge) 120 or 90 inches/second (16-track cartridge) See section 1.5.2. in HP 9145A CE Handbook
Search/Rewind Speed	90 inches/second	120 inches/second
Access Time: Load Unload	 1 min 15 sec (150 ft) 2 min 25 sec (600 ft) 25 sec (150 ft) 1 min 35 sec (600 ft)	 1 min 25 sec (150 ft) 2 min 10 sec (600 ft) 35 sec (150 ft) 1 min 25 sec (600 ft)
Cartridge Compatibility	Reads and Writes on 16-track only	Reads 16- or 32-track Writes 32-track only

Table A-1. Main Differences (continued)

Features	HP 9144A	HP 9145A
Host/Operating System support	See figure 1-3 in HP 9144A Support Manual	See table 1-1 in HP 9145A CE Handbook
Self-test Results	Rear Panel LED Display Front Panel Fault Light	Rear Panel LED Display Front Panel: Fault Light On/Flashing See section 5.4 in HP 9145A CE Handbook
Head Cleaning	Swabs: At specified times	Cleaning Cartridge: At specified times *and* When CLEAN light is lit on the front panel See section 1.2.1 in HP 9145A CE Handbook
FRAs	SB Controller R/W & Servo PCA Drive Mechanism PSU *See Note 1*	Controller PCA Tape Transport Assy PSU *See Note 2*
System Configuration (on HP 3000)	Type 3, Subtype 3	Type 4, Subtype 0
Diagnostic Commands	*See Note 3*	*See Note 3*

NOTE 1

Some versions of the HP 9144A consist of a single Drive Electronics PCA, and not the SB (Single Board) Controller and R/W & Servo PCA shown above. Earlier versions have several PCAs (see chapter 11 of the HP 9144A Hardware Support Manual - Product History).

NOTE 2

The R/W & Servo PCA for the HP 9145A is part of the Tape Transport Assembly (see chapter 7 of this Handbook).

NOTE 3

The following **new** Diagnostic Commands are supported by the HP 9145A:

- Clear Fault Log
- Device Use Log
- Fault Log
- LEDS
- Sensors
- Tape Info
- Transient Log
- LLR Log

The following Diagnostic Commands are **not** supported by the HP 9145A:

- Servo Diag
- Spare Block

Manual Part Number: 09145-90039
Printed in U.K., JULY 1988
Edition 1
E0788

HEWLETT PACKARD